Frequency Response of LPF Circuits

- *Bode plots*: magnitude and phase of the phasor ratio: V_{out} / V_{in}

  the range of frequencies is very wide (DC --> 10^8 Hz, for example)
  --> plot frequency axis on log scale

  the range of magnitudes is also very wide (and we care about ratios of 0.001 in some applications):
  --> plot magnitude on log scale

  define magnitude in decibels "dB" by

$$\left|\frac{V_{out}}{V_{in}}\right|_{dB} = 20\log\left|\frac{V_{out}}{V_{in}}\right|$$

  phase is usually expressed in degrees (rather than radians):

$$\angle\frac{V_{out}}{V_{in}} = \text{atan}\left[\frac{Im(V_{out}/V_{in})}{Re(V_{out}/V_{in})}\right]$$

Complex Algrebra Review

* Magnitudes:

$$\left|\frac{Z_1}{Z_2}\right| = \frac{|Z_1|}{|Z_2|} = \frac{\sqrt{X_1^2 + Y_1^2}}{\sqrt{X_2^2 + Y_2^2}}, \text{ where}$$

$$Z_1 = X_1 + jY_1 \qquad Z_2 = X_2 + Y_2$$

* Phases:

$$\angle\frac{Z_1}{Z_2} = \angle Z_1 - \angle Z_2 = \operatorname{atan}\frac{Y_1}{X_1} - \operatorname{atan}\frac{Y_2}{X_2}$$

* Examples:

Magnitude and Phase Plots of the Low Pass Filter

- $|V_{out} / V_{in}|$ --> 1 for "low" frequencies; $|V_{out} / V_{in}|$ --> 0 for "high" frequencies

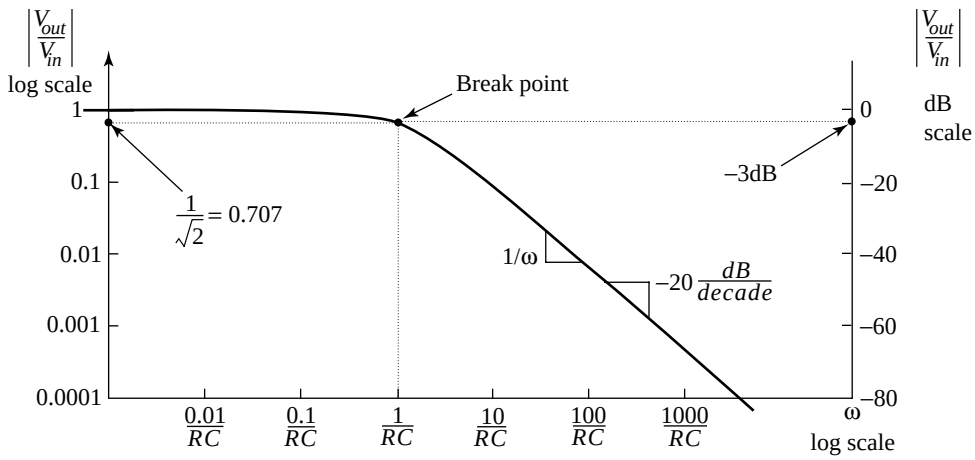

(a)

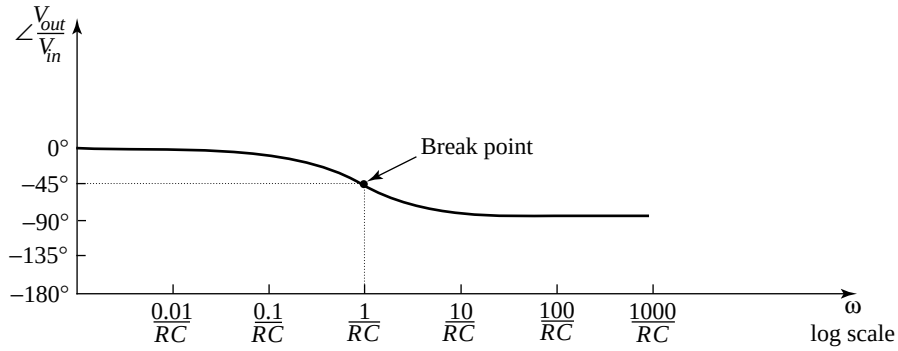

(b)

The "break point" is when the frequency is equal to $\omega_o = 1 / RC$, at which the ratio of phasors has a magnitude of - 3 dB and the phase is -45°.

The break frequency defines "low" and "high" frequencies.

Finding the Waveform from the Bode Plot

- Suppose that $v_{in}(t) = 100\text{ mV}\cos(\omega_o t + 0^o)$

  note that the input signal frequency is equal to the break frequency and that the phase is 0° ... the input signal phase is arbitrary and is generally selected to be 0.

  the output phasor is:

$$V_{out} = V_{in}\left[\frac{1}{1 + j(\omega_o/\omega_o)}\right] = V_{in}\left[\frac{1}{1 + j}\right]$$

magnitude:

$$\left|\frac{V_{out}}{V_{in}}\right|_{dB} = -3\text{dB} \qquad \ldots \qquad \left|V_{out}\right| = \frac{\left|V_{in}\right|}{\sqrt{2}} = \frac{100\text{mV}}{\sqrt{2}} = 71\text{mV}$$

phase:

$$\angle\frac{V_{out}}{V_{in}} = \angle 1 - \angle(1 + j) = 0 - 45^\circ \qquad \angle V_{out} = -45^\circ$$

$$V_{out} = (71\text{mV})e^{-j45^\circ}$$

output waveform $v_{out}(t)$ is given by:

$$v_{out}(t) = Re\left(V_{out}e^{j\omega_o t}\right) = Re(71\text{mV}e^{-j45^\circ}e^{j\omega_o t})$$

$$v_{out}(t) = 71\text{ mV}\cos(\omega_o t - 45^o)$$

Bode Plots of General Transfer Functions

- Procedure is to identify standard forms in the transfer functions, apply asymptotic techniques to sketch each form, and then combine the sketches graphically

$$H(j\omega) = \frac{Aj\omega(1 + j\omega\tau_2)(1 + j\omega\tau_{4.})...(1 + j\omega\tau_n)}{(1 + j\omega\tau_1)(1 + j\omega\tau_3)...(1 + j\omega\tau_{n-1})}$$

  where the τ_i are time constants -- $(1/\tau_i)$ are the break frequencies, which are called *poles* when in the demoninator and *zeroes* when in the numerator

- From complex algebra, the factors can be dealt with separately in the magnitude and in the phase and the results added up to find $|H(j\omega)|$ and phase $(H(j\omega))$

  Three types of factors:

  1. poles (binomial factors in the denominator)
  2. zeroes (binomial factors in the numerator)
  3. $j\omega$ in the numerator (or denominator)

Rapid Sketching of Bode Plots

- Poles: - 3 dB and -45° at break frequency

  0 dB below and -20 dB/decade above

  0° for low frequencies and -90° for high frequencies; width of transition is 10 and (1/10) break frequency

- Zeros: +3 dB and +45° at break frequency

  0 dB below and + 20 dB/decade above

  0° for low frequencies and +90° for high frequencies; width of transition is 10 and (1/10) break frequency

- * $j\omega$: +20 dB/decade (0 dB at ω = 1 rad/s) and +90° contribution to phase

  Example:

Frequency Response of Transistor Amplifiers

- Simplest case: CE short-circuit current gain $A_i(j\omega)$ as a function of frequency

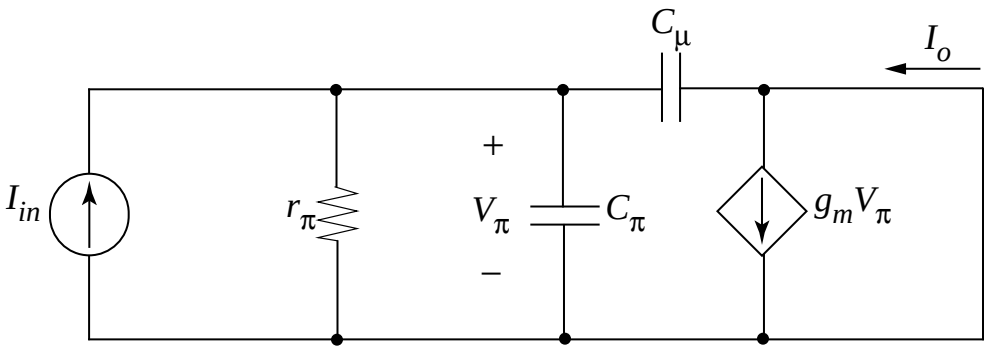

Kirchhoff's current law at the output node:

$$I_o = g_m V_\pi - V_\pi j\omega C_\mu$$

Kirchhoff's current law at the input node:

$$I_s = \frac{V_\pi}{Z_\pi} + V_\pi j\omega C_\mu \qquad \text{where} \qquad Z_\pi = r_\pi \| \left(\frac{1}{j\omega C_\pi}\right)$$

- Solving for V_π at the input node:

$$V_\pi = \frac{I_s}{(1/Z_\pi) + j\omega C_\mu}$$

Short-Circuit Gain Frequency Response

- Substituting V_π into the output node equation--

$$\frac{I_o}{I_s} = \frac{g_m Z_\pi \left(1 - \frac{j\omega C_\mu}{g_m}\right)}{1 + j\omega C_\mu Z_\pi}$$

- Substituting for Z_π and simplifying --

$$\frac{I_o}{I_s} = \frac{g_m r_\pi \left(1 - \frac{j\omega C_\mu}{g_m}\right)}{1 + j\omega r_\pi (C_\pi + C_\mu)} = \frac{\beta_o \left(1 - \frac{j\omega C_\mu}{g_m}\right)}{1 + j\omega r_\pi (C_\pi + C_\mu)} = \beta_o \left[\frac{1 - j\frac{\omega}{\omega_z}}{1 + j\frac{\omega}{\omega_p}}\right]$$

Current gain has one pole:

$$\omega_p = (r_\pi (C_\pi + C_\mu))^{-1}$$

and one zero

$$\omega_z = (g_m^{-1} C_\mu)^{-1} \gg \omega_p$$

Bode Plot of Short-Circuit Current Gain

- Note low frequency magnitude of gain is β_o

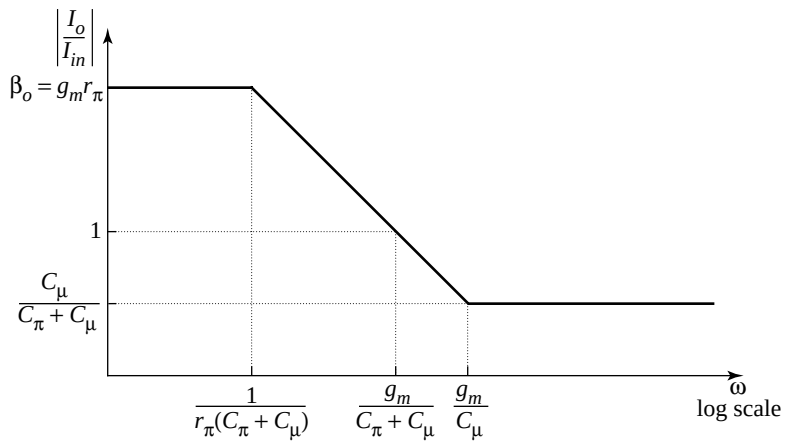

(a)

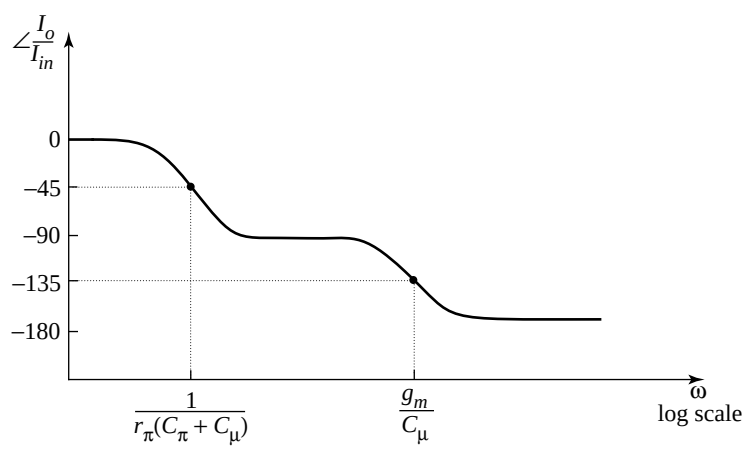

(b)

- Frequency at which current gain is reduced to 0 dB is defined as the **transition frequency** ω_T. Neglecting the zero,

$$\boxed{\omega_T = \frac{g_m}{(C_\pi + C_\mu)}}$$

Transition Frequency of the Bipolar Transistor

- Dependence of transition time $\tau_T = \omega_T^{-1}$ on the bias collector current I_C:

$$\tau_T = \frac{1}{\omega_T} = \frac{C_\pi + C_\mu}{g_m} = \frac{g_m \tau_F + C_{jE} + C_\mu}{g_m}$$

$$\tau_T = \tau_F + \left(\frac{C_{jE} + C_\mu}{g_m}\right) = \tau_F + \frac{V_{th}}{I_C}(C_{jE} + C_\mu)$$

- If the collector current is increased enough to make the second term negligible, then the minimum τ_T is the base transit time, τ_F.. In practice, the ω_T decreases at very high values of I_C due to other effects and the minimum τ_T may not be achieved.

- Numerical values of $f_T = (1/2\pi)\omega_T$ range from 10 MHz for lateral pnp's to 10 GHz for oxide-isolated npn's

  Note that the small-signal model is not valid above f_T (due to distributed effects in the base) and the zero in the current gain is not observed

Common-Source Current Gain

- CS amplifier has a non-infinite input *impedance* for $\omega > 0$ and we can measure its small-signal current gain.

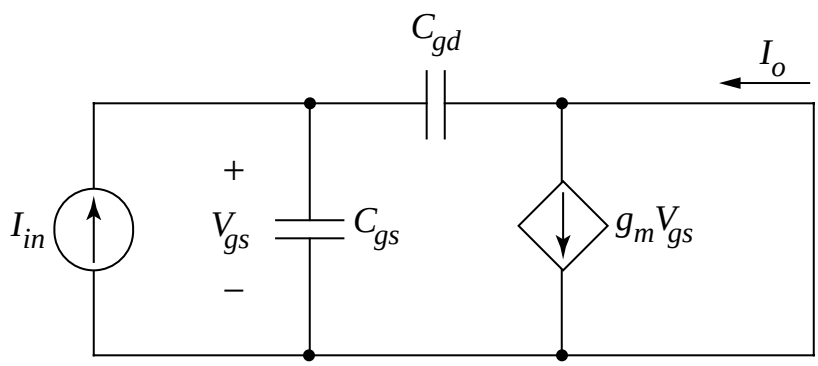

- Analysis is similar to CE case; result is

$$\frac{I_o}{I_{in}} = \frac{g_m\left(1 - \frac{j\omega C_{gd}}{g_m}\right)}{j\omega(C_{gs} + C_{gd})} \approx \frac{g_m}{\omega(C_{gs} + C_{gd})}$$

- Transition frequency for the MOSFET is

$$\boxed{\omega_T \approx \frac{g_m}{C_{gs} + C_{gd}}}$$

Transition Frequency of the MOSFET

- Substitution of gate-source capacitance and transconductance:

$$C_{gs} = \frac{2}{3}WLC_{ox} \gg C_{gd} \text{ and } g_m = \frac{W}{L}\mu_n C_{ox}(V_{GS} - V_{Tn})$$

$$\omega_T \approx \frac{g_m}{C_{gs}} = \frac{\frac{W}{L}\mu_n C_{ox}(V_{GS} - V_{Tn})}{\frac{2}{3}WLC_{ox}} = \frac{3}{2}\mu_n\left[\frac{(V_{GS} - V_{Tn})}{L}\right]L$$

- The transition time is the inverse of ω_T and can be written as the average time for electrons to drift from source to drain

$$\tau_T = \frac{L}{\mu_n\left[\frac{2}{3}\frac{(V_{GS} - V_{Tn})}{L}\right]} = \frac{L}{\left|\overline{v_{dr}}\right|}$$

velocity saturation causes τ_T to decrease linearly with L; however,submicron MOSFETs have transition frequencies that are approaching those for oxide-isolated BJTs

Frequency Response of Voltage Amplifiers

- Common-emitter amplifier:

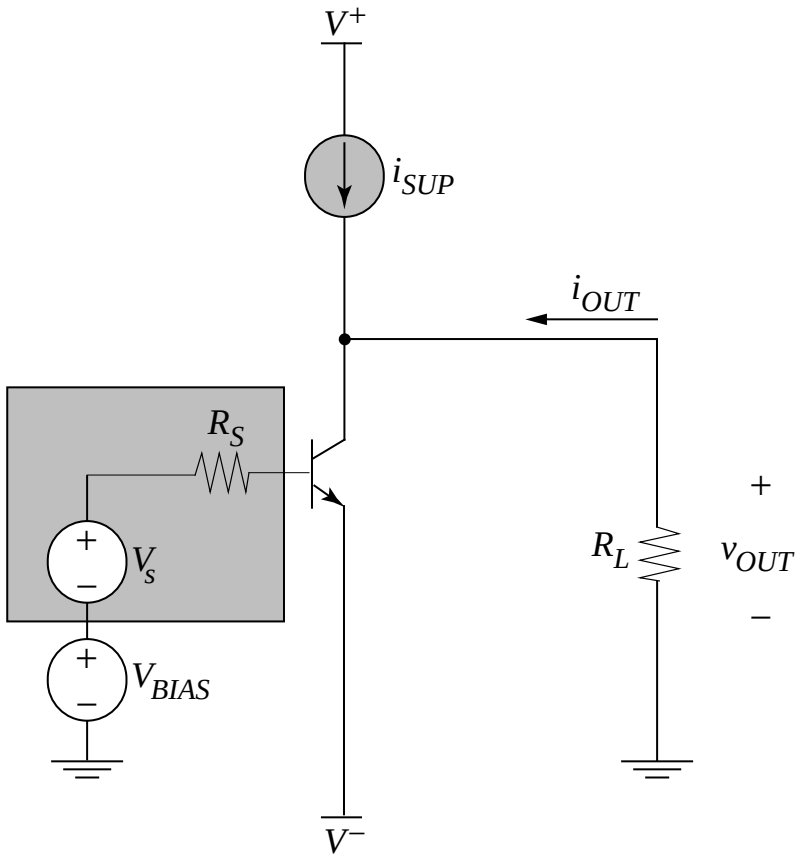

Procedure: substitute small-signal model and perform phasor analysis

Brute Force Phasor Analysis

- "Exact" analysis: transform into Norton form at input to facilitate nodal analysis

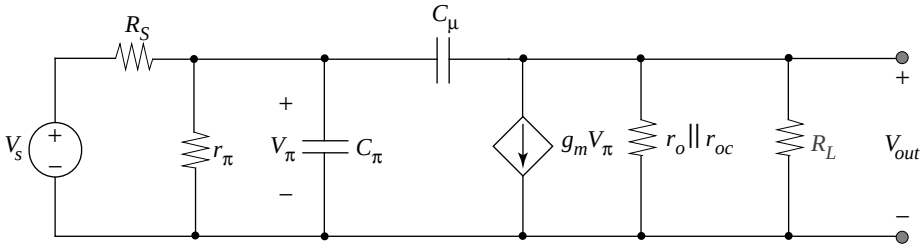

(a)

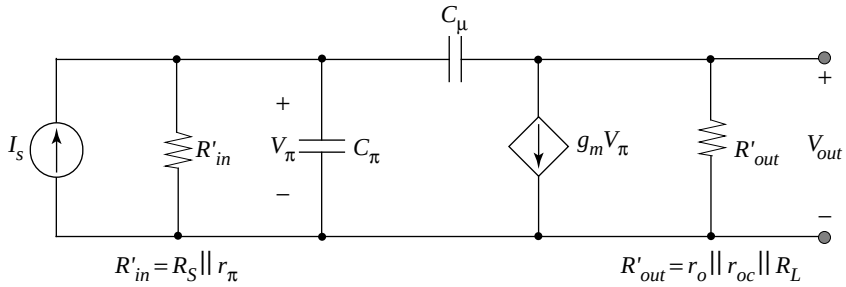

(b)

Note that C_{cs} is omitted, along with r_b