Forward-Active Terminal Currents

- Collector current: (electron diffusion current density) x (emitter area)

$$I_C = -J_{nB}^{diff} A_E = \left(\frac{qD_n n_{pBo} A_E}{W_B}\right) e^{V_{BE}/V_{th}}$$

(why minus sign? I_C is by def. "positive-in," opposite to $+x$ direction)

- Base current: (reverse-injected hole diffusion current density) x(emitter area)
(minus sign again reflects "positive-in" convention for I_B vs. $+x$ direction)

$$I_B = -J_{pE}^{diff} A_E = \left(\frac{qD_p p_{nEo} A_E}{W_E}\right)(e^{V_{BE}/V_{th}} - 1)$$

Forward-Active Current Gains

- Emitter current: Kirchoff's current law --> $I_E = -(I_B + I_C)$

$$I_E = -(-J_{nB}^{diff} + -J_{pE}^{diff})A_E = -\left[\left(\frac{qD_p p_{nEo} A_E}{W_E}\right) + \left(\frac{qD_n n_{pBo} A_E}{W_B}\right)\right] e^{V_{BE}/V_{th}}$$

- The ratio of collector current to the magnitude of the emitter current is defined as "alpha-F"

$$\frac{I_C}{-I_E} = \frac{\left(\frac{qD_n n_{pBo} A_E}{W_B}\right)}{\left(\frac{qD_p p_{nEo} A_E}{W_E}\right) + \left(\frac{qD_n n_{pBo} A_E}{W_B}\right)} = \alpha_F$$

- α_F --> 1 ... typically, $\alpha_F = 0.99$.

Current Gains (cont.)

- The ratio of collector current to base current can be found in terms of α_F:

$$I_B = -I_E - I_C = \frac{I_C}{\alpha_F} - I_C = I_C\left(\frac{1-\alpha_F}{\alpha_F}\right)$$

Solving for I_C as a function of I_B, we find that

$$\boxed{I_C = \left(\frac{\alpha_F}{1-\alpha_F}\right)I_B = \beta_F I_B} \quad .$$

- A typical value is $\beta_F = 100$ ... with an uncertainty of +/- 50% since it is a sensitive function of the parameters and internal dimensions of the BJT.

The Saturation Region

- $V_{CE(sat)}$ = 0.1 V (approx) from the characteristics --> both the emitter-base and the base-collector junctions are forward-biased
- Law of the Junction --> find minority carrier concentrations in the emitter, base, and the collector

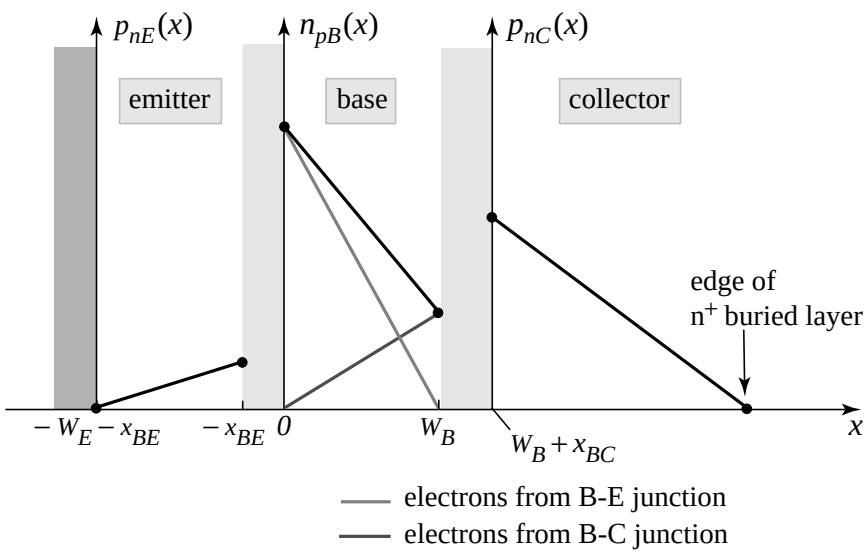

- Both junctions are injecting and both are also collecting ... since the electric field in the depletion region remains in the same direction under forward bias.
- Separate the electron diffusion current in the base into two components: one due to the emitter-base junction (with zero bias on the base-collector junction) and the other due to the base-collector junction:

$$J_{nB}^{diff} = -qD_n \frac{n_{pBo}(e^{V_{BE}/V_{th}} - 1)}{W_B} + qD_n \frac{n_{pBo}(e^{V_{BC}/V_{th}} - 1)}{W_B}$$

Ebers-Moll Model

- Electron diffusion current in the base: multiply by the emitter area

$$I_{diff} = \boxed{-I_S(e^{V_{BE}/V_{th}} - 1)} + \boxed{I_S(e^{V_{BC}/V_{th}} - 1)} = -I_1 + I_2$$

- Emitter current I_E: three components

1. $-I_1$ due to injection of electrons from the emitter-base junction,
2. $-I_1 / \beta_F$ due to reverse injection of holes into the emitter, and
3. I_2 due to collection of electrons from the base-collector junction.

$$I_E = -I_1 + (-I_1/\beta_F) + I_2 = -\left(1 + \frac{1}{\beta_F}\right)I_1 + I_2 = -\left(\frac{1}{\alpha_F}\right)I_1 + I_2$$

- Collector current I_C: three components (by symmetry)

1. $-I_2$ due to injection of electrons from the base-collector junction,
2. $-I_2 / \beta_R$ due to reverse injection of holes into the collector, and
3. I_1 due to collection of electrons from the emitter-base junction

$$I_C = I_1 - I_2 - \frac{I_2}{\beta_R} = I_1 - \left(1 + \frac{1}{\beta_R}\right)I_2 = I_1 - \left(\frac{1}{\alpha_R}\right)I_2$$

$\beta_R = \alpha_R / (1 - \alpha_R)$ is the reverse current gain

Ebers-Moll Model (cont.)

- "Standard form" for Ebers-Moll equations: define two new constants

$$I_{ES} = I_S / \alpha_F \text{ and } I_{CS} = I_S / \alpha_R,$$

- Emitter current:

$$\boxed{I_E = -I_{ES}(e^{V_{BE}/V_{th}} - 1) + \alpha_R I_{CS}(e^{V_{BC}/V_{th}} - 1)}$$

- Collector current:

$$\boxed{I_C = \alpha_F I_{ES}(e^{V_{BE}/V_{th}} - 1) - I_{CS}(e^{V_{BC}/V_{th}} - 1)}$$

- The collector current and the emitter current represent two diodes with current-controlled current sources coupling the emitter and the collector branches

Carrier Fluxes in Saturation

- Both junctions injecting and collecting; holes injected into collector recombine with electrons upon reaching the n^+ buried layer
- For bias condition shown, $I_C > 0$ ... injection from emitter-base junction still dominates. (could have $I_C = 0$ or even $I_C < 0$)

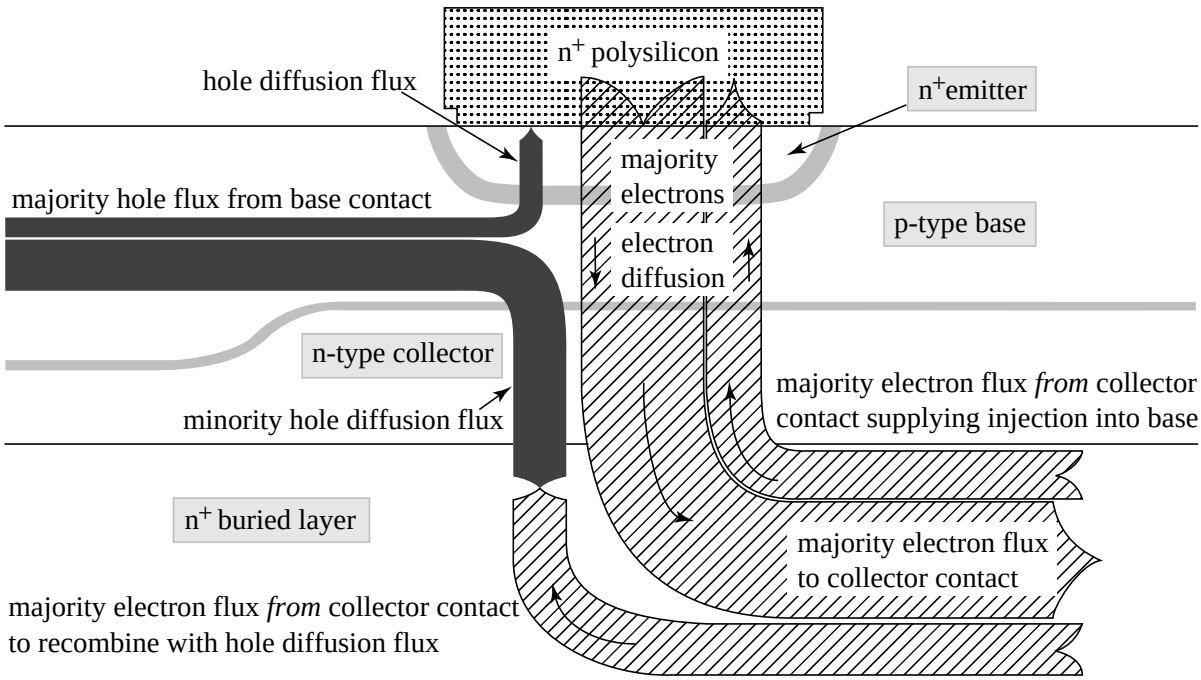

Ebers-Moll Equivalent Circuit

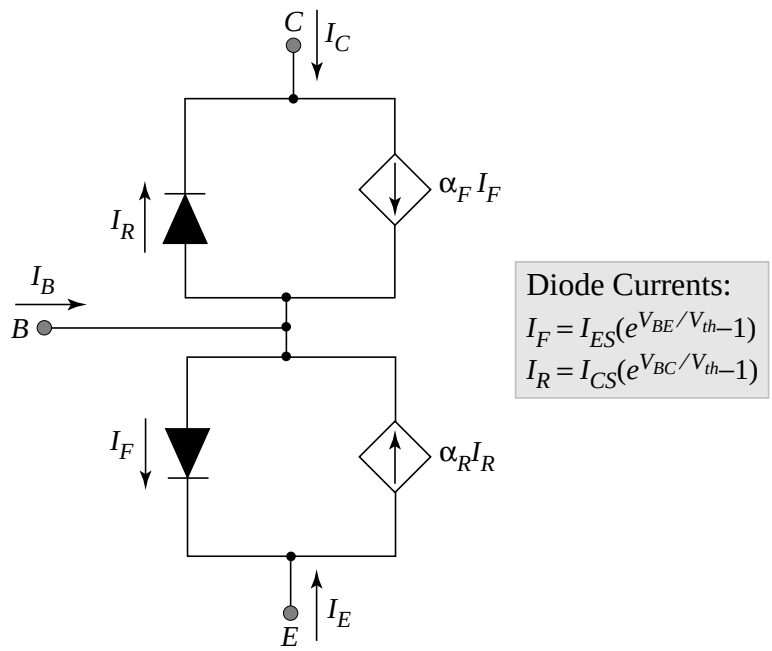

This model for the BJT applies to general device structures, with the four parameters I_{ES}, I_{CS}, α_F, and α_R being linked by "reciprocity"

$$\alpha_F I_{ES} = \alpha_R I_{CS} = I_S$$

- Ebers-Moll *must* be simplified for hand calculation

Forward Active Model

- I_R is negligible --> can neglect current through B-C diode

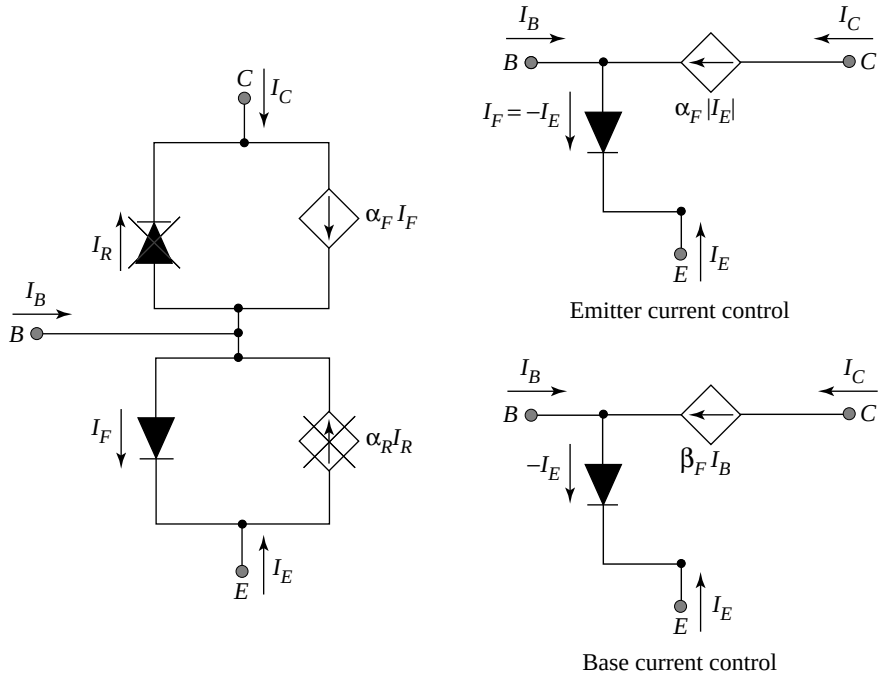

- Eliminate forward-biased diode by replacing with a 0.7 V battery:

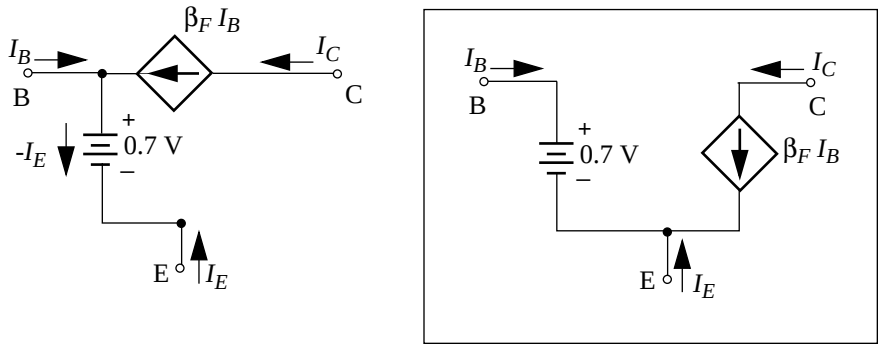

Saturation

- Include both diodes in the circuit ... both as batteries

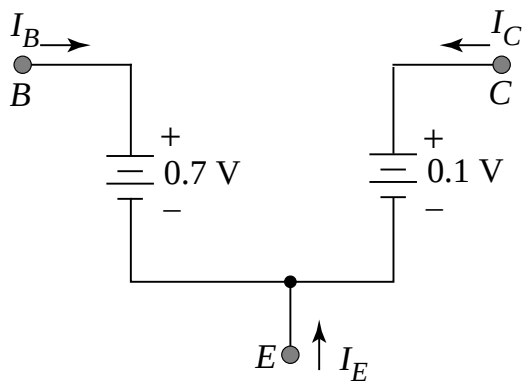

note that the batteries make the controlled current sources irrelevent to the circuit.

Small-Signal Model of the Forward-Active npn BJT

- Transconductance (same concept as for MOSFET):

$$g_m = \left.\frac{\partial i_C}{\partial v_{BE}}\right|_Q$$

Ebers-Moll (forward-active): $i_C = I_S e^{v_{BE}/V_{th}}$

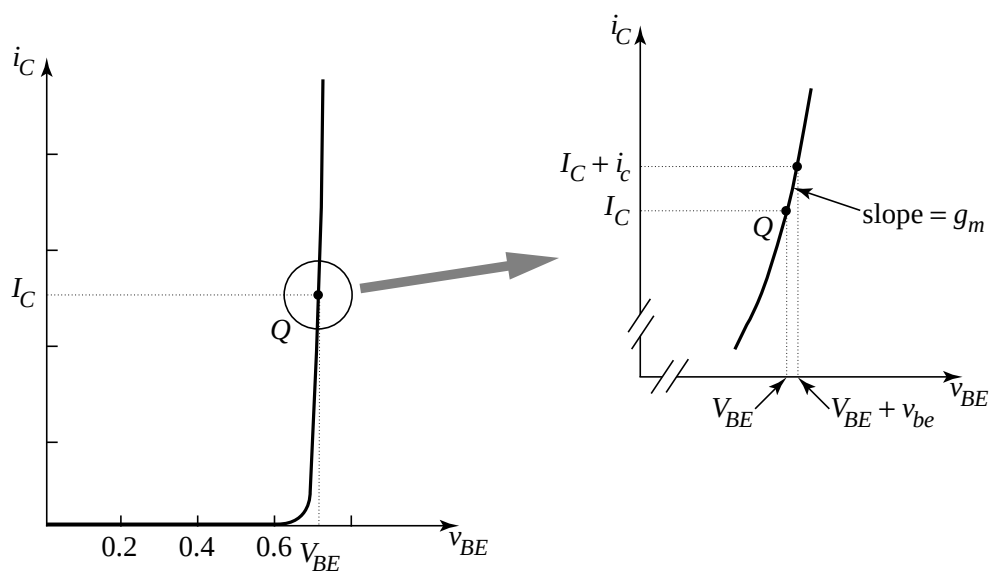

Evaluating the derivative, we find that

$$g_m = \left(\frac{I_S}{V_{th}}\right) e^{V_{BE}/V_{th}} = \frac{I_C}{V_{th}}$$

Input Resistance

- The collector current is a function of the base current in the forward-active region (recall $I_C = \beta_F I_B$). At the operating point Q, we define

$$\beta_o = \left.\frac{\partial i_C}{\partial i_B}\right|_Q$$

  and so $i_c = \beta_o\, i_b$. (Note that the "DC beta" β_F and the small-signal β_o are both highly variable from device to device)

- Since the base current is therefore a function of the base-emitter voltage, we define the input resistance r_π as:

$$r_\pi^{-1} = \left.\frac{\partial i_B}{\partial v_{BE}}\right|_Q = \left.\frac{\partial i_B}{\partial i_C}\right|_Q \left.\frac{\partial i_C}{\partial v_{BE}}\right|_Q = \left(\frac{1}{\beta_o}\right) g_m$$

- Solving for the input resistance

$$\boxed{r_\pi = \frac{\beta_o}{g_m} = \frac{\beta_o V_{th}}{I_C} = \frac{kT\beta_o}{qI_C}}$$

- For a high input resistance (often desirable), we need a high current gain or a low DC bias current.

Output Resistance

- The Ebers-Moll model has perfect current source behavior in the forward-active region -- actual characteristics show some increase:

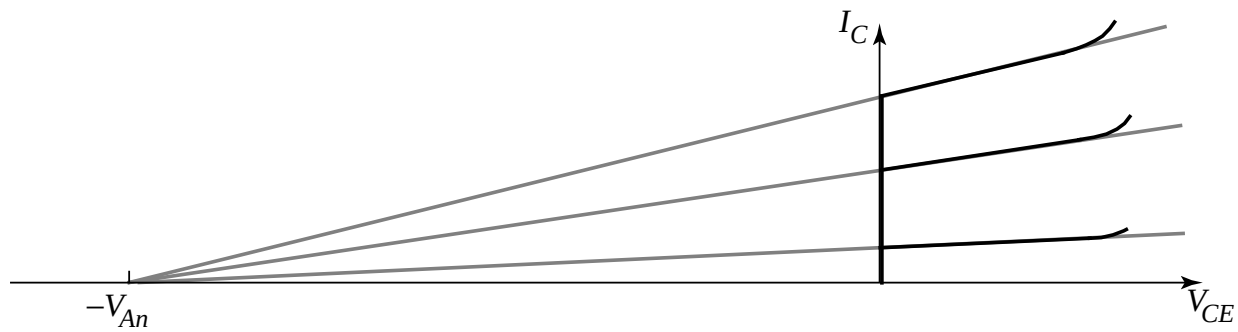

- Why? Base width shrinks due to encroachment by base-collector depletion region

  Approximate model: introduce Early voltage V_{An} to model increase in i_C

  Model: $$i_C = I_S e^{v_{BE}/V_{th}}\left(1 + \frac{v_{CE}}{V_{An}}\right)$$

- Output resistance:

$$r_o^{-1} = \left.\frac{\partial i_C}{\partial v_{CE}}\right|_Q \cong \frac{I_C}{V_{An}}$$

Numerical Values of Small-Signal Elements

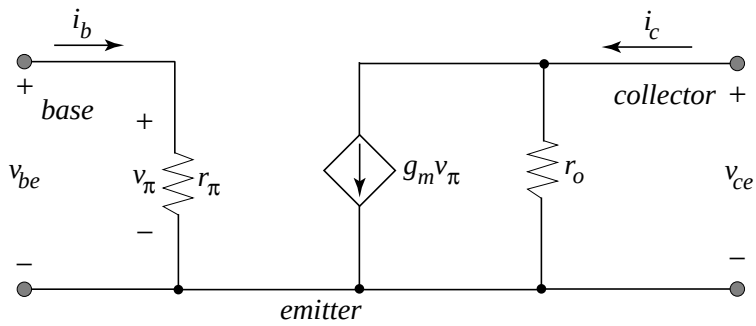

■ Transconductance:

I_C = 100 μA, V_{th} = 25 mV --> $\boxed{g_m = 4 \text{ mS} = 4 \times 10^{-3} \text{ S}}$

Note: g_m varies *linearly* with collector current and is independent of device geometry, in contrast to the MOSFET

■ Input resistance:

β_o = 100, I_C = 100 μA, V_{th} = 25 mV --> $\boxed{r_\pi = 25 \text{ k}\Omega}$

■ Output resistance:

I_C = 100 μA, V_{An} = 35 V --> $\boxed{r_o = 350 \text{ k}\Omega}$

V_{An} = Early voltage increases with increasing base width and decreases with decreasing base doping.