Voltage Amplifier Frequency Response

- Chapter 9 multistage voltage amplifier

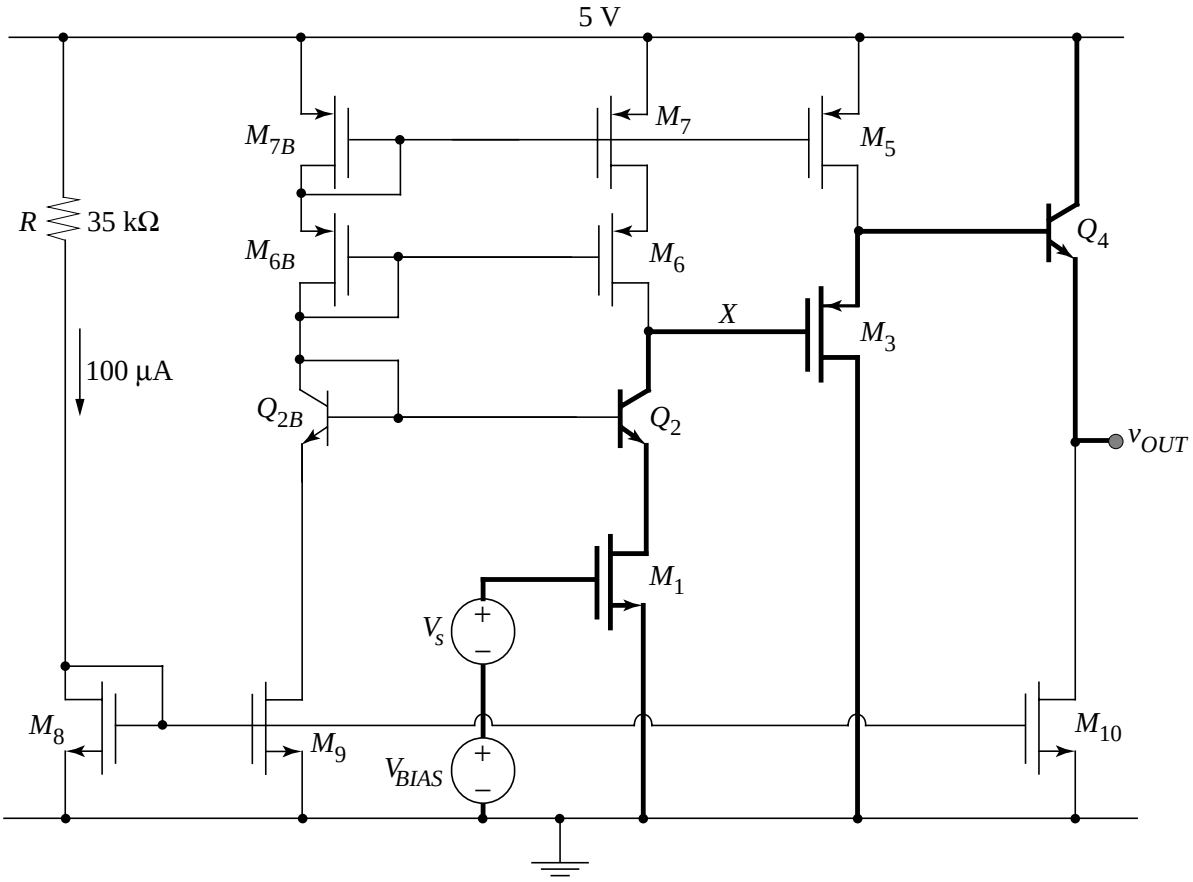

- Approaches:

  1. brute force OCTC -- do for all capacitances in the circuit
  2. identify the largest contributor(s) and calculate the Thévenin resistance associated with them

Try second approach: identify four nodes in signal path

Qualitative Evaluation of Time Constants

- Input node: no contribution since $R_S = 0$

- Drain of M_1: “low impedance node” since $R_{in(CB)} = 1/g_{m2}$

- Node X: extremely high resistance ... could be a big time constant

- Source of M_3: “low impedance node” since $R_{out(CD)} = 1/g_{m3}$

- Output node: “low impedance node” since $R_{o(CC)} = 1/g_{m4}$

Note: we are *not* considering capacitances *between* nodes here ... since we are doing an approximate analysis, we will use Miller’s theorem to find their effective capacitance to ground

Small-Signal Model of Node *X*

- Account for all of the capacitances from node *X* to *small-signal* ground:

  1. Base-collector capacitance $C_{\mu 2}$ of Q_2 (since it is connected to diode-connected transistors M_{6B} and M_{7B} that are in turn connected to V_{DD})

  2. Gate-drain capacitance C_{gd6} of M_6 (since it is connected to the same node as $C_{\mu 2}$)

  3. Gate-drain capacitance C_{gd3} of M_3 (since it is connected directly to ground)

  Omitted from Section 10.7's analysis: parasitic capacitances to substrate -- C_{cs2} and C_{db6} are both present between node *X* and ground

  4. Effective capacitance due to C_{gs3} connected between the input and the output of the common-drain stage:

$$C_{eff} = C_{gs3}(1 - A_{vC_{gs3}})$$

  The gain across C_{gs3} is about 1, but an accurate calculation would include any backgate effect on M_3 if present.

- Small-signal model with all (non-parasitic) capacitances

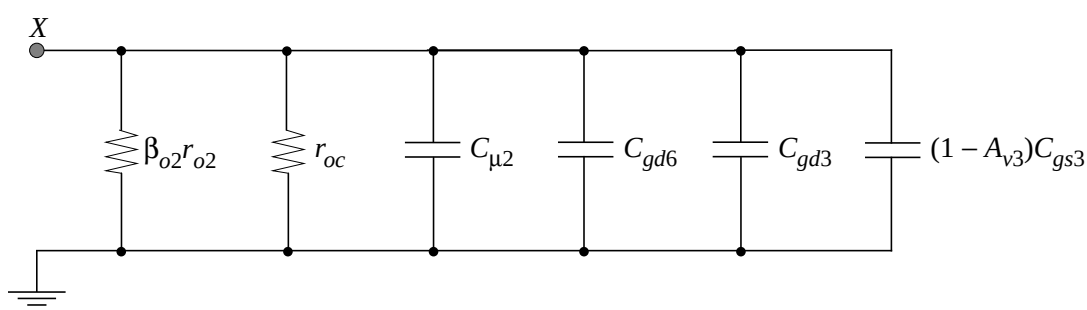

Gain-Bandwidth Product

- Considering only the time constant from node X

$$\omega_{3dB} \approx \frac{1}{[(\beta_{o2} r_{o2} || g_{m6} r_{o6} r_{o7})](C_{\mu 2} + C_{gd6} + C_{gd3} + (1 - A_{vC_{gs3}}) C_{gs3})}$$

- Approximate low-frequency gain -- from Chapter 9

$$A_{vo} \approx -g_{m1}(\beta_{o2} r_{o2} || g_{m6} r_{o6} r_{o7})$$

- Gain-bandwidth product

$$|A_{vo}| \omega_{3dB} \approx \frac{g_{m1}}{C_{\mu 2} + C_{gd6} + C_{gd3} + (1 - A_{vC_{gs3}}) C_{gs3}}$$

Magnitude Bode Plot

- Assuming that the second pole is greater than the unity gain frequency, the Bode plot is

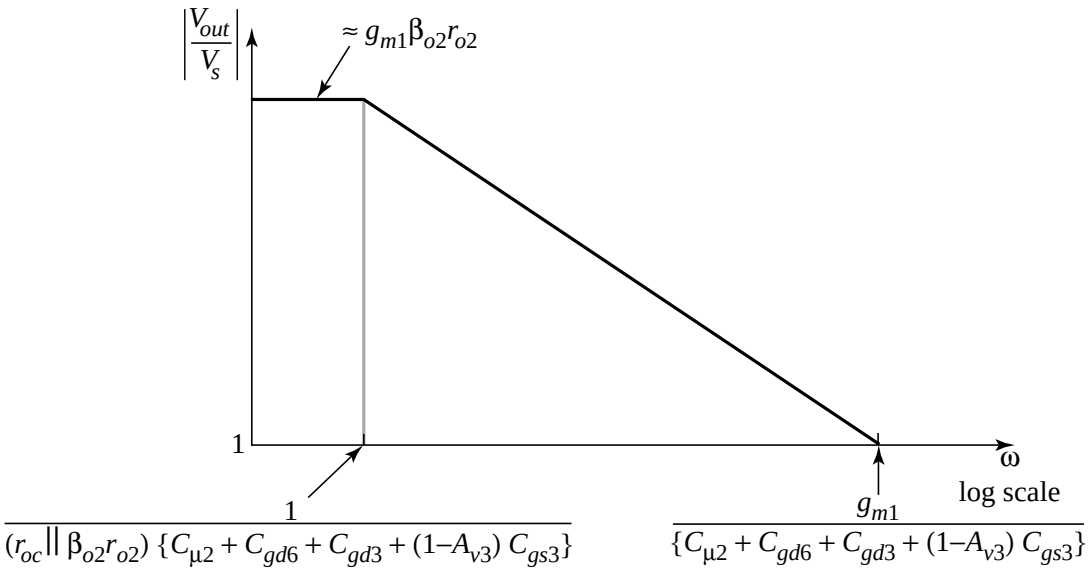

Differential Amplifiers

- General structure: two inputs, two outputs

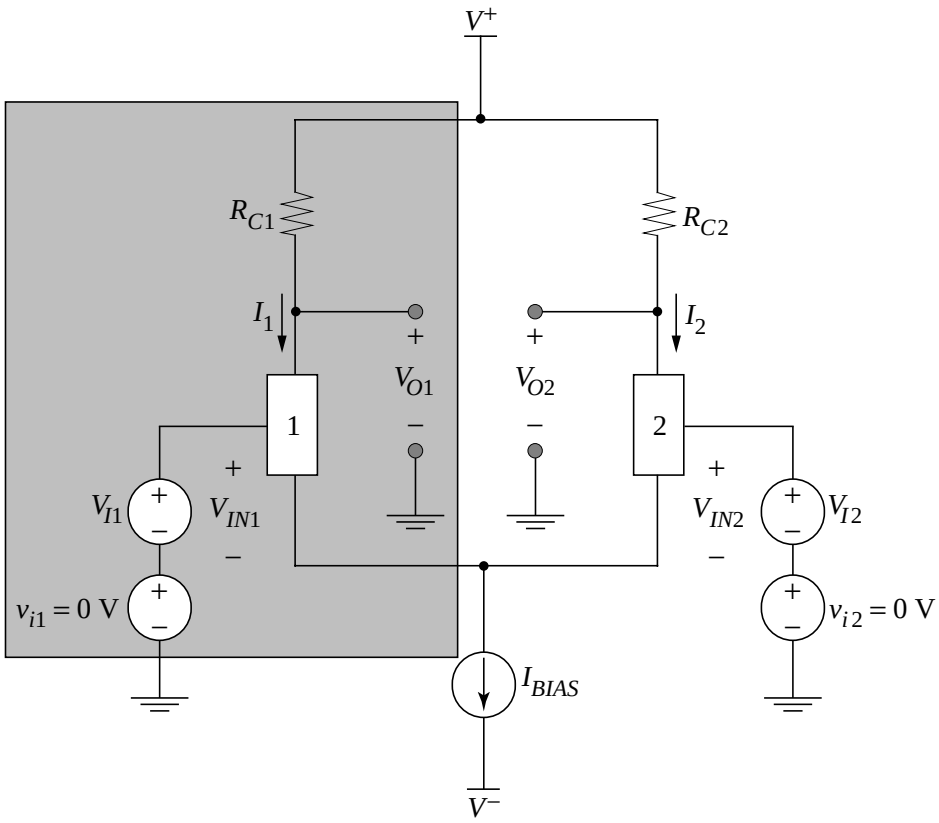

Consider balanced situation: $V_{I1} = V_{I2}$ and $R_{C1} = R_{C2}$ and devices 1 and 2 are in their constant-current modes.

$I_{BIAS} = I_1 + I_2 = 2(V^+/R_C)$

Adjust so $V_{O1} = V_{O2}$ are about 0 V (note the dual supplies)

Decomposition of Small-Signal Input Voltages

- Inputs v_{i1} and v_{i2} are *not* the "natural inputs" to understand how the differential amplifier works ...
- Define two new voltages

  differential-mode input voltage = $v_{id} = v_{i1} - v_{i2}$

  common-mode input voltage = $v_{ic} = (1/2)(v_{i1} + v_{i2})$
- Expressing the inputs v_{i1} and v_{i2} in terms of v_{id} and v_{ic}

$$v_{i1} = v_{ic} + \frac{v_{id}}{2}$$

$$v_{i2} = v_{ic} - \frac{v_{id}}{2}$$

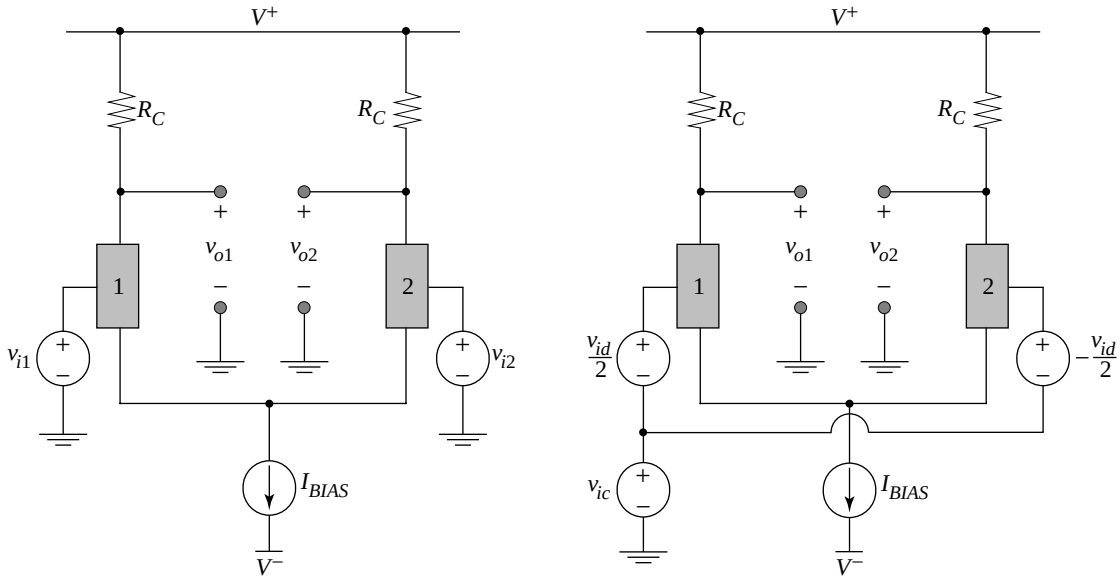

Example of Signal Decomposition

- $v_{i1} = v_{in}$ and $v_{i2} = 0$ V results in both a differential-modeand a common-mode input to the amplifier

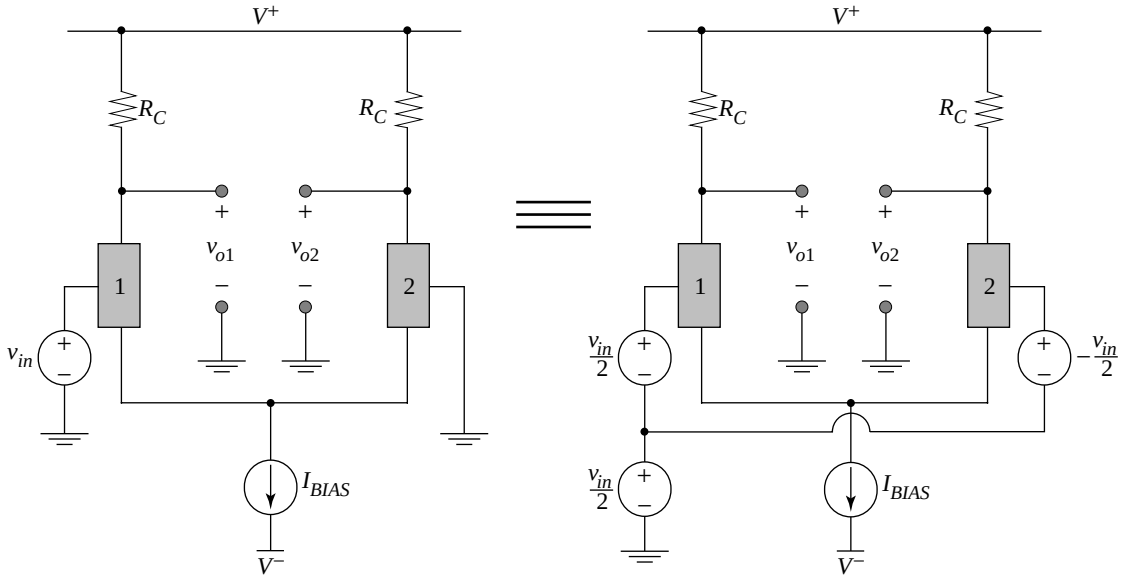

(a) (b)

- Goal:

  determine the response of the differential amplifier to v_{id} and v_{ic} separately and then reconstruct the response

Small-Signal Model of Bipolar Diff. Amplifier

- Define r_{ob} as the internal (source) resistance of the bias current source

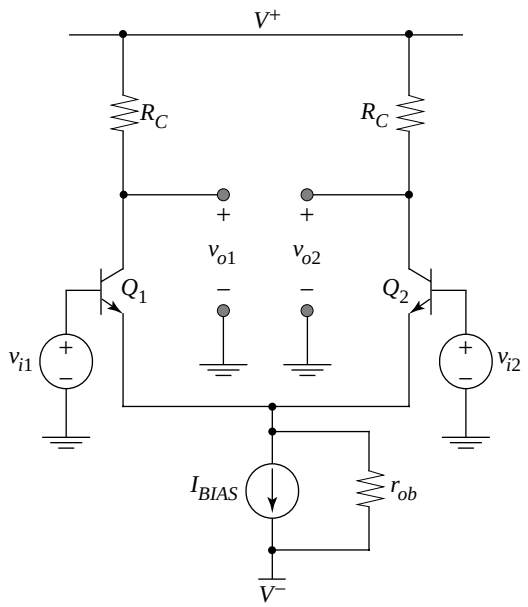

- Small-signal model with **purely differential** inputs

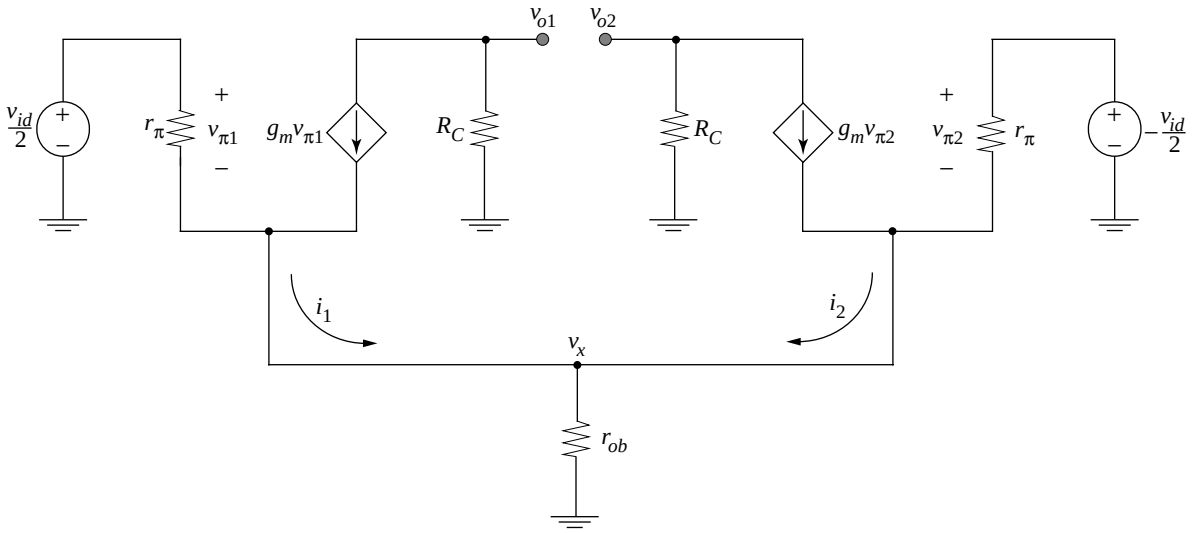

Small-Signal Model with Purely Differential Inputs

- The voltage at v_x must be zero for purely differential inputs --> it can be considered a small-signal or incremental ground reference
- Only need to solve half of the circuit, whose outputs are + or - v_{od} /2

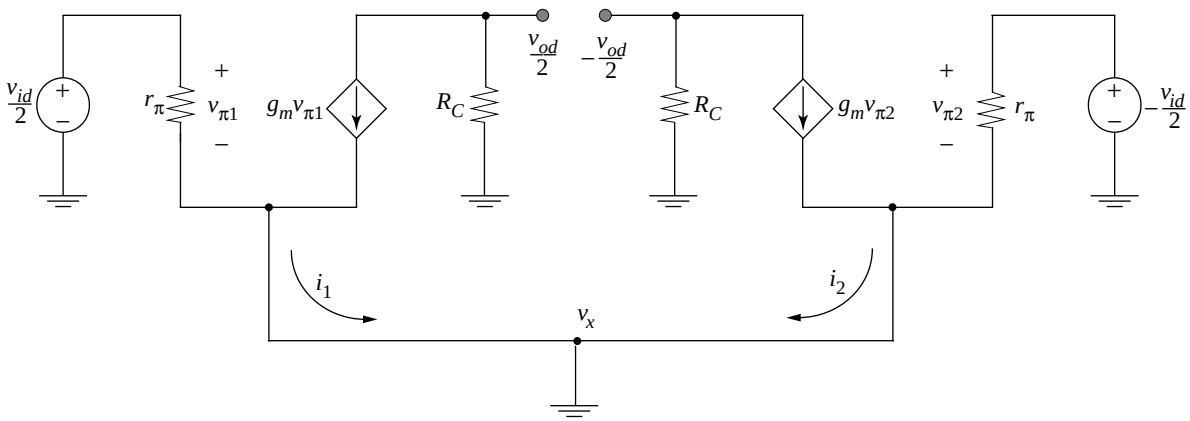

- Solve left half to find

$$\frac{v_{od}}{2} = -g_m R_C \frac{v_{id}}{2}$$

define **differential-mode gain a_{dm}** by

$$\boxed{a_{dm} = \frac{v_{od}}{v_{id}} = -g_m R_C}$$

Small-Signal Model for Common-Mode Inputs

- Now consider other extreme situation: $v_{i1} = v_{i2} = v_{ic}$

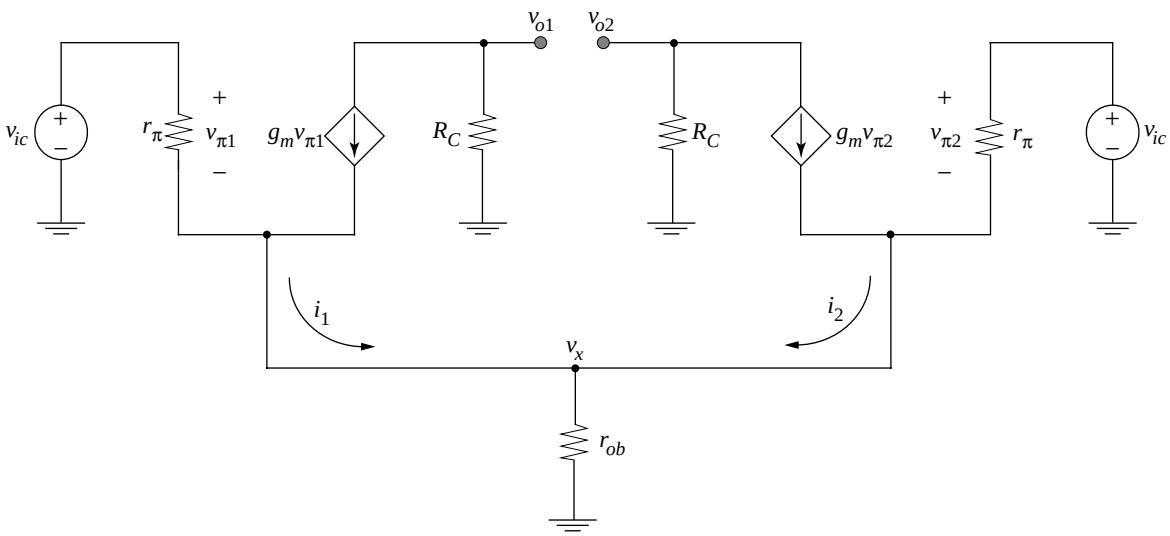

$i_1 = i_2$ --> $v_x = (2i_1)\, r_{ob}$ which will be satisfied by splitting the circuit

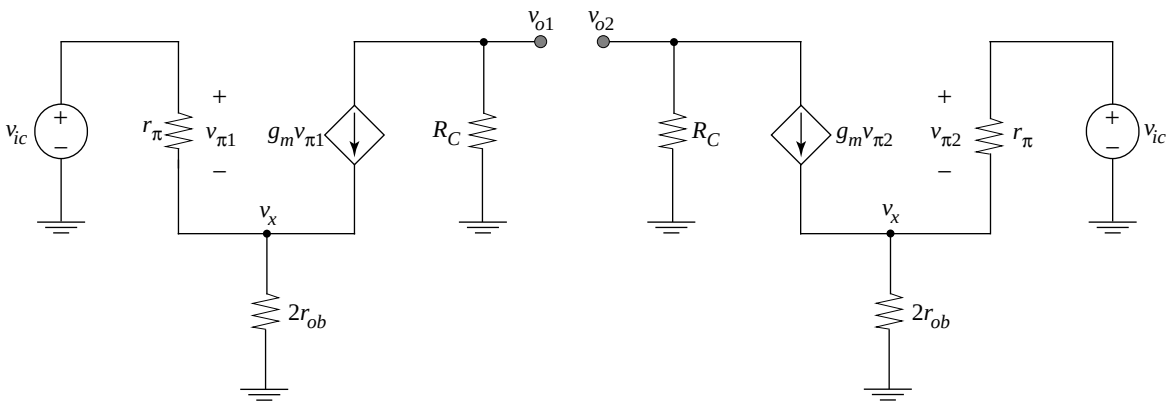

Common-Mode Voltage Gain

- Solve either circuit to find $a_{cm} = v_{oc}/v_{ic}$

$$v_{\pi 1} = v_{ic} - v_x$$

$$v_x = \left(\frac{v_{\pi 1}}{r_{\pi 1}} + g_{m1} v_{\pi 1}\right)(2r_{ob}) \approx g_{m1}(2r_{ob}) v_{\pi 1}$$

substituting and solving for $v_{\pi 1}$

$$v_{\pi 1} = \frac{v_{ic}}{1 + g_{m1}(2r_{ob})}$$

the output voltage v_{oc} is

$$v_{oc} = -(g_{m1} v_{\pi 1}) R_C = \frac{-g_{m1} R_C}{1 + g_{m1}(2r_{ob})} v_{ic}$$

- **Common-mode voltage gain a_{cm}** is

$$\boxed{a_{cm} = \frac{-g_{m1} R_C}{1 + g_{m1}(2r_{ob})}}$$

Common-Mode Rejection Ratio (CMRR)

- The ratio of differential-mode to common-mode gains is

$$\left|\frac{a_{dm}}{a_{cm}}\right| = CMRR = \left|\frac{-g_{m1}R_C}{\dfrac{-g_{m1}R_C}{1+g_{m1}(2r_{ob})}}\right| = 1 + 2g_{m1}r_{ob}$$

  since the product of the transconductance and the internal resistance of the bias current can be on the order of 100-1000, the “differential” amplifier is well-named -- it amplifies v_{id} much more than v_{ic}

  to first order, $a_{cm} \approx 0$ for differential amplifiers with current-source bias

- Output voltages for general input voltages (including a_{cm})

  express v_{o1} and v_{o2} in terms of common-mode and differential-mode output voltages

$$v_{o1} = v_{oc} + \frac{v_{od}}{2} = a_{cm}v_{ic} + \frac{1}{2}a_{dm}v_{id} = a_{cm}\left(\frac{v_{i1}+v_{i2}}{2}\right) + \frac{1}{2}a_{dm}(v_{i1}-v_{i2})$$

$$v_{o2} = v_{oc} - \frac{v_{od}}{2} = a_{cm}v_{ic} - \frac{1}{2}a_{dm}v_{id} = a_{cm}\left(\frac{v_{i1}+v_{i2}}{2}\right) - \frac{1}{2}a_{dm}(v_{i1}-v_{i2})$$

Two-Port Differential Model

- Differential input resistance: use differential half-circuit with test source $v_t/2$

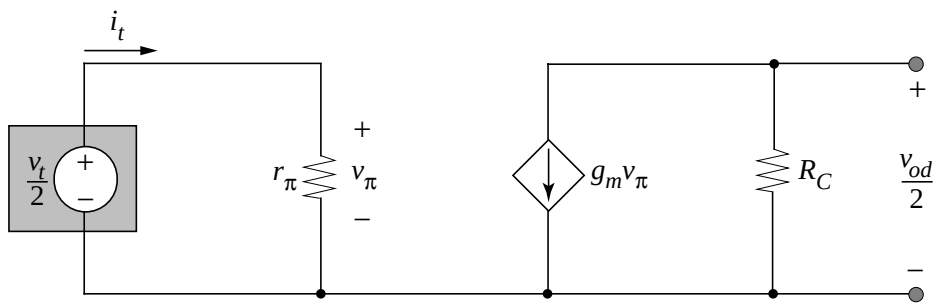

Why $v_t/2$? Full differential voltage is applied across amplifier inputs -- 1/2 is dropped across left side

$$i_t = \frac{v_t/2}{r_\pi} \text{ --> } \boxed{R_{id} = \frac{v_t}{i_t} = 2r_\pi}$$

- Differential output resistance: use differential half-circuit with test source $v_t/2$

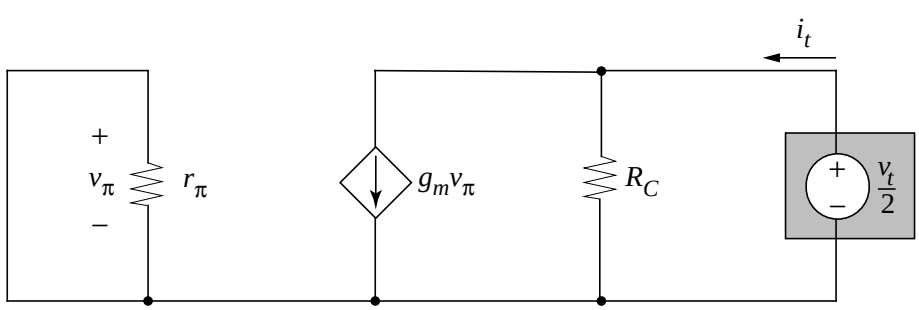

Similarly, $\boxed{R_{od} = v_t/i_t = 2R_C}$

Two-Port Differential Voltage Model

- Note that neither input nor output is referenced to ground

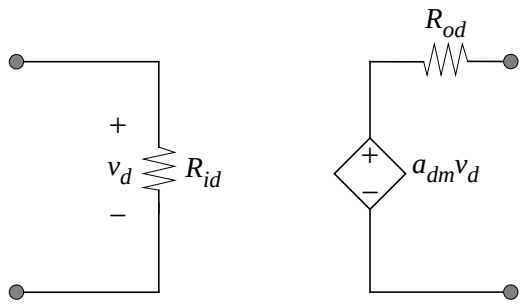

- Applying the model: must modify source and load into differential form

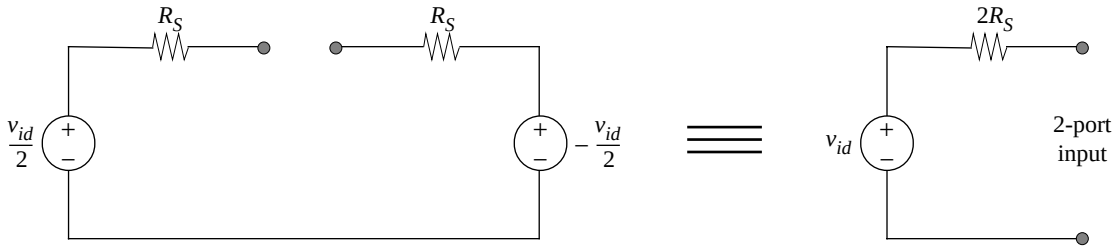

(a) (b)

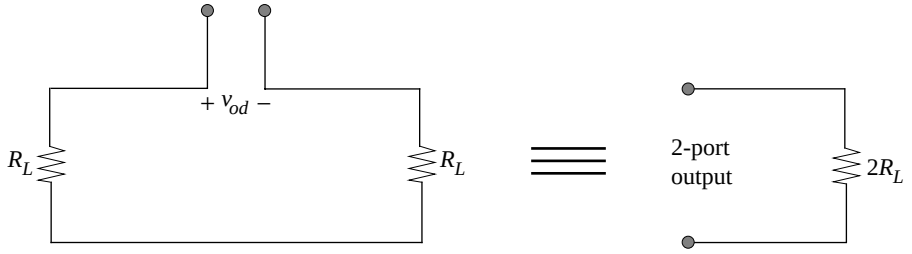

(a) (b)