Differential Amplifier with Single-Ended Outputs

- An output voltage referenced to ground is important in some applications

  Simple approach: take the output from one side

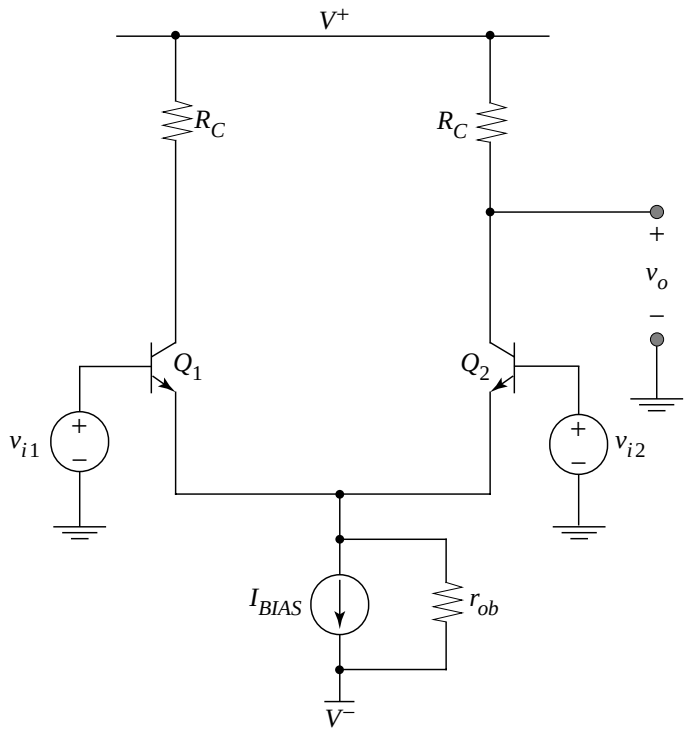

Purely differential input voltage --> $v_{o2} = -v_{od}/2 = -(1/2)a_{dm}\, v_{id}$

$$\frac{v_o}{v_{id}} = -\left(\frac{1}{2}\right)(-g_m R_C) = \frac{g_m R_C}{2}$$

Sign change (since $v_{\pi 2} = -\, v_{id}/2$) and a loss of 50% of gain

Differential Amplifier with Current Supplies

- Boost gain by using current supplies adjusted to $I_{BIAS}/2$ instead of R_C

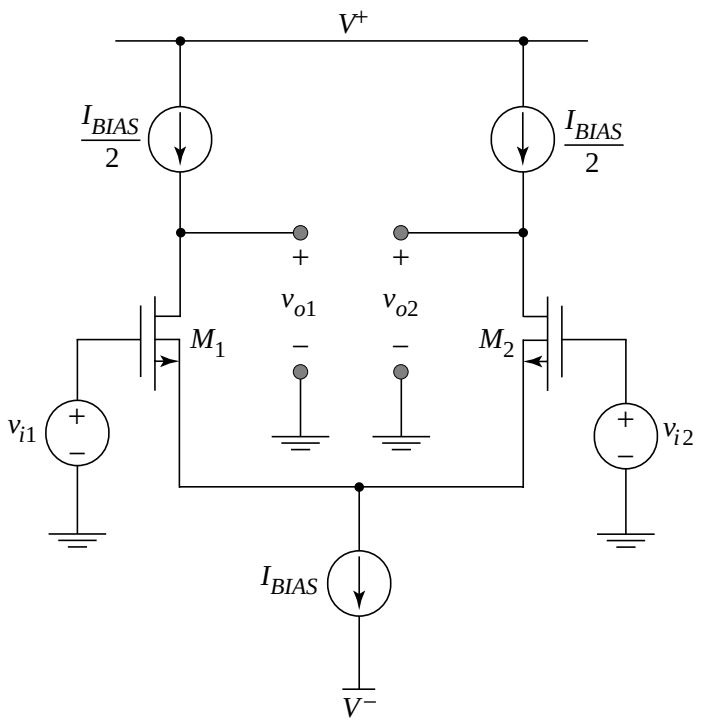

$a_{dm} = -g_m(r_o \| r_{oc})$ for this differential amplifier

Drawbacks:

Bias stability is not possible without a feedback circuit

Taking the output from one side still reduces the gain by 50%

Differential Amplifier with Current Mirror Supply

- By substituting a current mirror (diode voltage source biasing a current source transistor), this amplifier has a stable bias

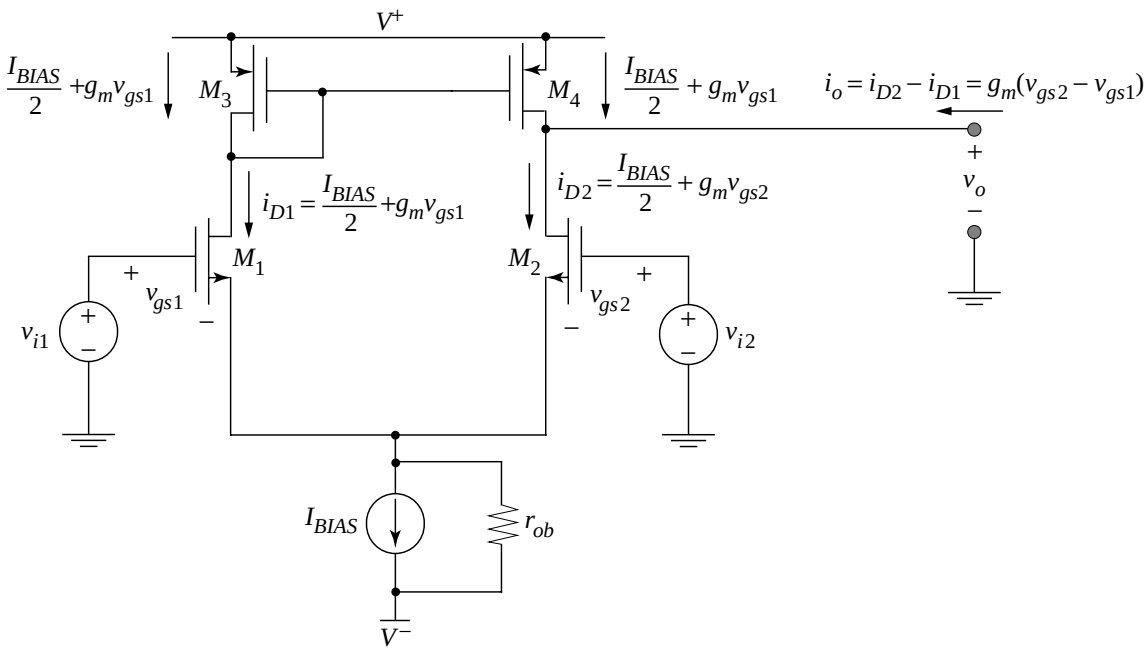

The output node should be held at a constant DC potential

$V_{OUT} = V^+ - V_{SG3}$

so that the amplifier is balanced and the output is a small-signal short-circuit

- Note that this amplifier is *not* symmetrical and that half circuits do not apply

Short-Circuit Transconductance G_{md}

- Approximate circuit analysis:

$$i_{D1} = I_{D1} + g_{m1}v_{gs1} = \frac{I_{BIAS}}{2} + g_m v_{gs1}$$
$$i_{D2} = I_{D2} + g_{m2}v_{gs2} = \frac{I_{BIAS}}{2} + g_m v_{gs2}$$

Current mirror forces the drain current $-i_{D4} = -i_{D3} = i_{D1}$

Kirchhoff's current law at the output states that

$$i_O = i_{D2} - (-i_{D4}) = i_{D2} - i_{D1}$$

$$i_O = \left(\frac{I_{BIAS}}{2} + g_m v_{gs2}\right) - \left(\frac{I_{BIAS}}{2} + g_m v_{gs1}\right) = g_m(v_{gs2} - v_{gs1})$$

Kirchhoff's voltage law at the input states that $v_{gs2} - v_{gs1} = v_{i2} - v_{i1} = -v_{id}$

$$i_o = g_m(-v_{id}) \text{ --> } \boxed{G_{md} = \frac{i_o}{v_{id}} = -g_m}$$

- No factor of two in converting differential input into a single-ended current!

Output Resistance R_{od}

- The current-mirror circuit is not symmetrical, so the procedure must be applied to the entire amplifier

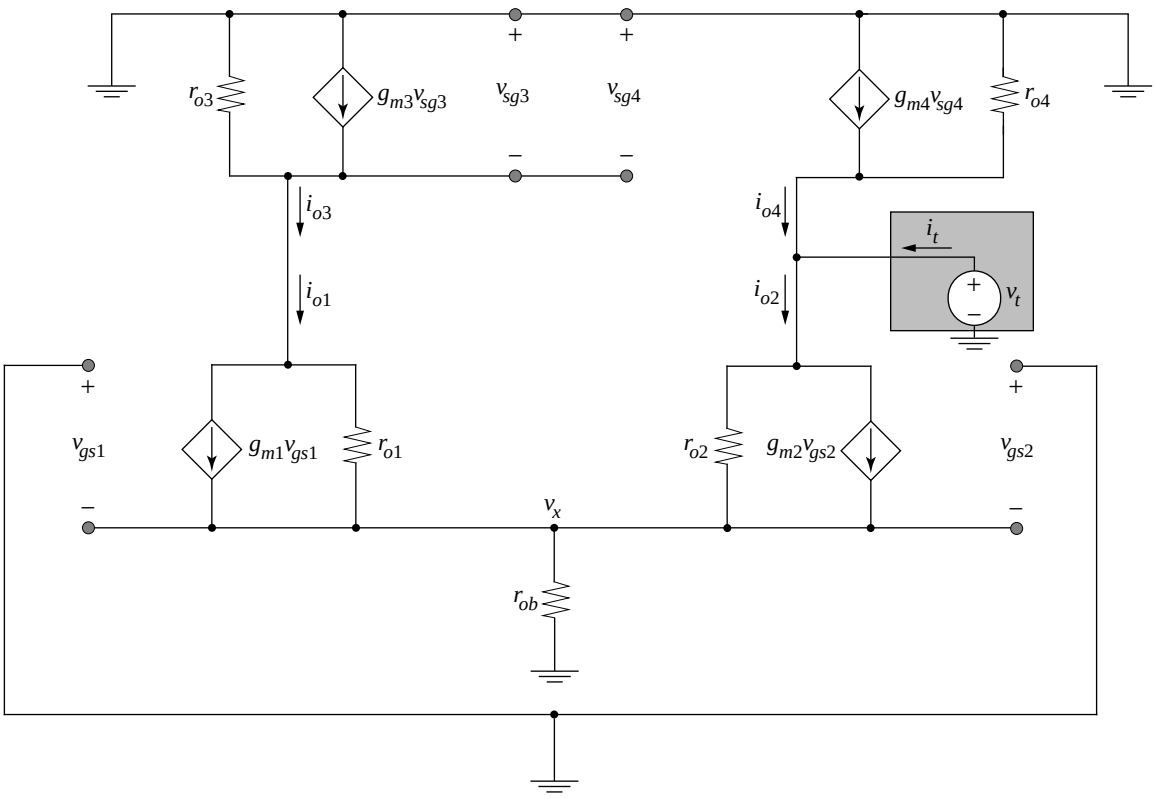

- Complicated analysis (see Section 11.5), but a simple result

$$R_{od} = r_{o2} || r_{o4}$$

Two-Port Differential Model: Current-Mirror Supply

- The output port is referenced to ground, in contrast to the earlier model of the symmetrical amplifier with $v_o = v_{od}$

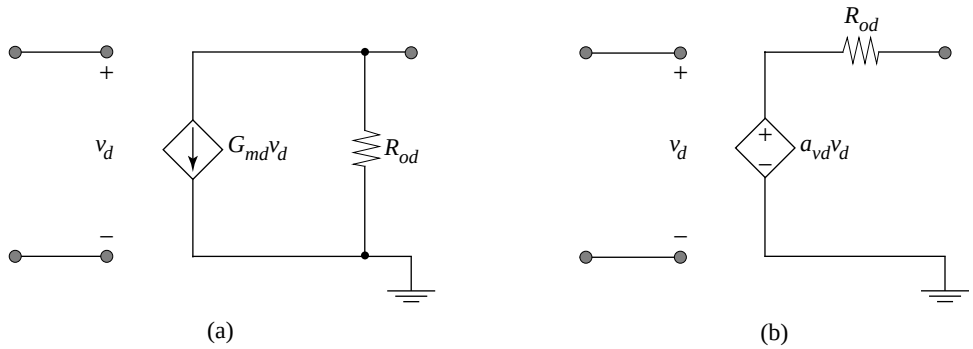

Input Common-Mode Voltage Range

- The range of DC common-mode inputs over which the differential amplifier can function is an important practical specification (see op amp spec. sheets)

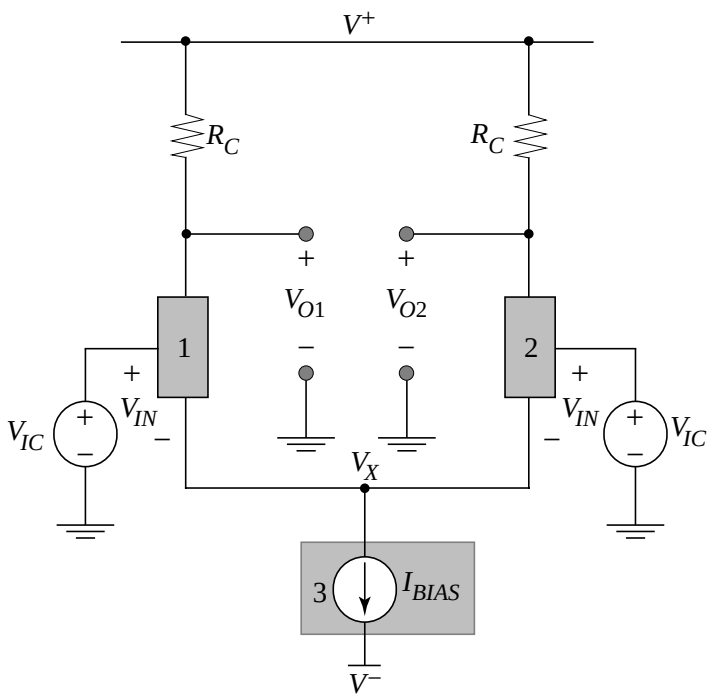

Upper limit to V_{IC}

devices 1 and 2 leave their constant-current regions

Lower limit to V_{IC}

bias current device 3 leaves its constant-current region

All-Bipolar Differential Amplifier V_{IC} Range

- Maximum common-mode input voltage:

  $V_{O1} = V^{+} - (I_{BIAS}/2)R_C$

  Q_1 enters saturation when $V_{BC1} = V_{BE1} - V_{CE(sat)1} = 0.7\text{ V} - 0.1\text{ V} = 0.6\text{ V}$

$$V_{IC(\max)} = V_{O1} + 0.6\text{ V} = V^{+} - \left(\frac{I_{BIAS}}{2}\right)R_C + 0.6\text{ V}$$

- Minimum common-mode input voltage:

  $V_X = V_{IC} - V_{BE1} = V_{IC} - 0.7\text{ V}$

  Q_3 enters saturation when $V_X - V^{-} = V_{CE(sat)3} = 0.1\text{ V}$

$$V_{IC(\min)} = V_X + V_{BE1} = V^{-} + V_{CE(\text{sat})3} + V_{BE1} = V^{-} + 0.8\text{ V}$$

Large-Signal Response of MOS Differential Amplifiers

- MOS differential amplifier

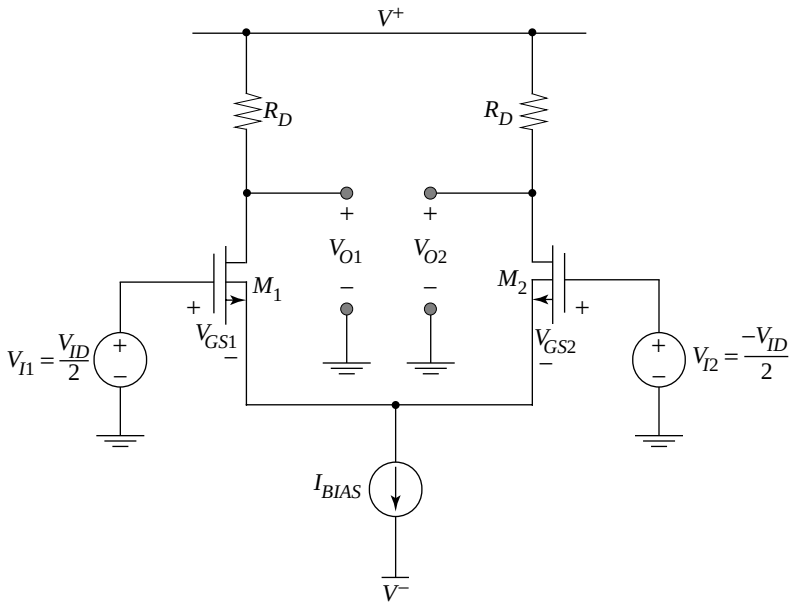

- Kirchhoff's voltage law around input loop

$$V_{ID} = V_{GS1} - V_{GS2}$$

For a sufficiently large positive differential input voltage, all of the current I_{BIAS} will be sunk through M_1 and M_2 will be cutoff.

Large-Signal Response of MOS Differential Amplifiers

- Solve for this critical value V_{ID}^{*} by setting $I_{D1} = I_{BIAS}$ and $I_{D2} = 0$ A

$$V_{ID}^{*} = \left(V_{Tn} + \sqrt{\frac{I_{BIAS}}{\left(\frac{W}{2L}\right)\mu_n C_{ox}}} \right) - V_{Tn} = \sqrt{\frac{I_{BIAS}}{\left(\frac{W}{2L}\right)\mu_n C_{ox}}}$$

- For $\left|V_{ID}\right| \le V_{ID}^{*}$ we can solve for the transfer function

$$I_{D1} = K_n (V_{GS1} - V_{Tn})^2 \text{ and } I_{D2} = K_n (V_{GS2} - V_{Tn})^2$$

where $K_n = (1/2)\mu_n C_{ox}(W/L)$

- Solving for $V_{GS1} - V_{GS2} = V_{ID}$

$$\sqrt{I_{D1}} - \sqrt{I_{D2}} = \sqrt{K_n}(V_{GS1} - V_{GS2}) = \sqrt{K_n} V_{ID}$$

procedure:

use this equation and $I_{D1} + I_{D2} = I_{BIAS}$

solve for I_{D1} and I_{D2} as functions of V_{ID}

Large-Signal Transfer Function for MOS Differential Amplifier

- Transition width is adjustable via W/L and I_{BIAS}

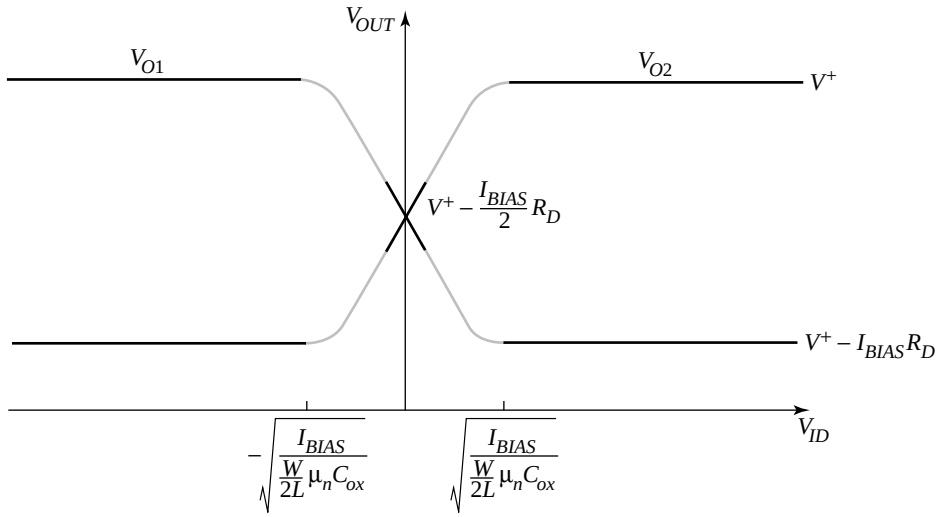

Large-Signal Response of Bipolar Differential Amplifiers

- Find large-signal transfer curves for collector currents I_{C1} and I_{C2} and output voltages V_{O1} and V_{O2} as functions of V_{ID}

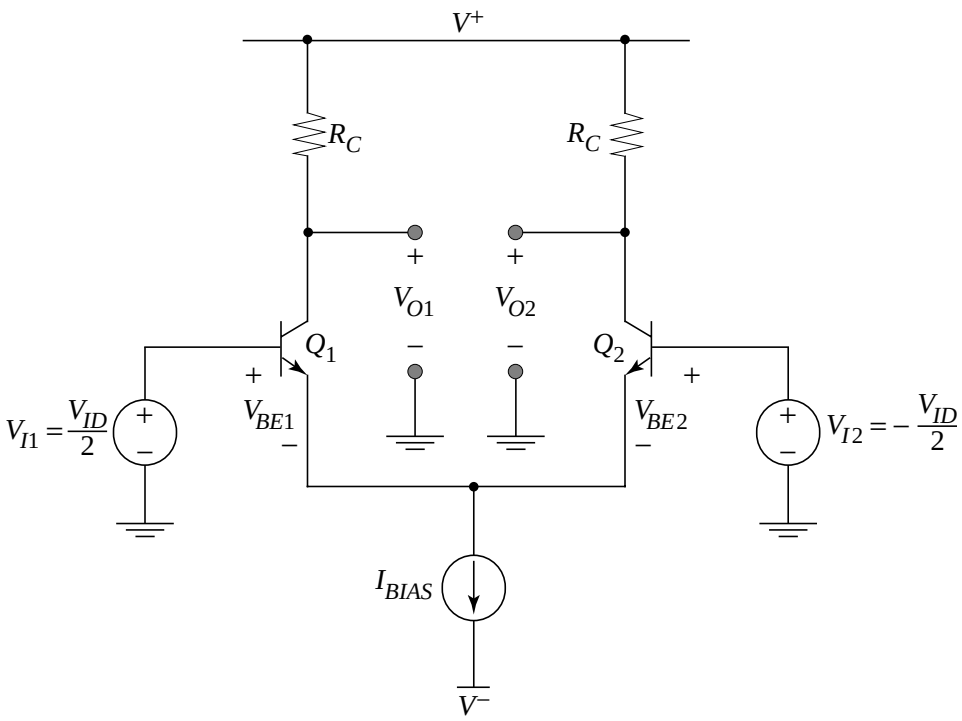

Quantitative Large-Signal Model

- $V_{ID} = V_{BE1} - V_{BE2}$

- Ebers-Moll for the forward-active region:

$$I_{C1} = I_S e^{V_{BE1}/V_{th}} = I_S e^{(V_{I1} - V_E)/V_{th}}$$

$$I_{C2} = I_S e^{V_{BE2}/V_{th}} = I_S e^{(V_{I2} - V_E)/V_{th}}$$

Dividing the two equations, the emitter voltage V_E can be eliminated:

$$\frac{I_{C2}}{I_{C1}} = e^{(V_{I1} - V_{I2})/V_{th}} = e^{V_{ID}/V_{th}}$$

Since the two emitter currents must sum to equal the bias current I_{BIAS}, the collector currents are also related by:

$$\left(\frac{1}{\alpha_F}\right)(I_{C1} + I_{C2}) = I_{BIAS}$$

Large-Signal Differential Response

- Solving for each current as a function of the differential input voltage $V_{ID} = V_{I1} - V_{I2}$:

$$I_{C1} = \frac{\alpha_F I_{BIAS}}{1 + e^{-V_{ID}/V_{th}}}$$

$$I_{C2} = \frac{\alpha_F I_{BIAS}}{1 + e^{V_{ID}/V_{th}}}$$

- Output voltages:

$$V_{O1} = V^+ - \frac{\alpha_F I_{BIAS} R_C}{1 + e^{-V_{ID}/V_{th}}}$$

$$V_{O2} = V^+ - \frac{\alpha_F I_{BIAS} R_C}{1 + e^{V_{ID}/V_{th}}}$$

Transfer Functions for Bipolar Differential Amplifier

- Width of transition region

  look at current ratio in base 10 --

$$\frac{I_{C2}}{I_{C1}} = 10^{V_{ID}/60\text{ mV}} \text{ --> } V_{ID} = (60\text{ mV})\log(I_{C2}/I_{C1})$$
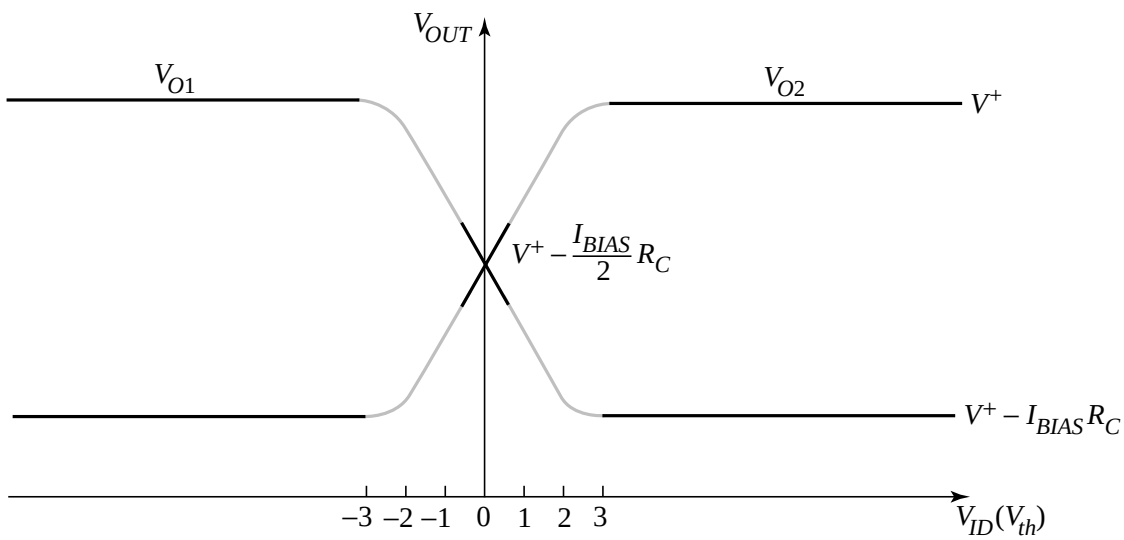
  factor of 10 difference --> V_{ID} = 60 mV ... practically, $\pm 3V_{th}$ will swing the output voltage between the limiting values