p-channel MOSFET Models

- DC drain current in the three operating regions: $-I_D > 0$

$$-I_D = 0 \text{ A} \qquad (V_{SG} \le -V_T)$$

$$-I_D = \mu_p C_{ox}(W/L)[V_{SG} + V_{Tp} - (V_{SD}/2)](1 + \lambda_p V_{SD})V_{SD} \qquad (V_{SG} \ge -V_{Tp},\ V_{SD} \le V_{SG} + V_{Tp})$$

$$-I_D = \mu_p C_{ox}(W/(2L))(V_{SG} + V_{Tp})^2(1 + \lambda_p V_{SD}) \qquad (V_{SG} \ge -V_{Tp},\ V_{SD} \ge V_{SG} + V_{Tp})$$

- The threshold voltage with backgate effect is given by:

$$V_{Tp} = V_{TOp} - \gamma_p((\sqrt{-V_{SB} + 2\phi_n}) - \sqrt{2\phi_n})$$

<u>Numerical values</u>:

$\mu_p C_{ox}$ is a measured parameter. Typical value: $\mu_p C_{ox} = 25\ \mu\text{AV}^{-2}$

$$\lambda_p \approx \frac{0.1\mu\text{mV}^{-1}}{L}$$

V_{Tp} = -0.7 to -1.0 V, which should be approximately $-V_{Tn}$ for a well-controlled CMOS process

MOSFET Small-Signal Model

- Concept: find an equivalent circuit which interrelates the incremental changes in i_D, v_{GS}, v_{DS}, etc. Since the changes are small, the small-signal equivalent circuit has linear elements only (e.g., capacitors, resistors, controlled sources)
- Derivation: consider for example the relationship of the increment in drain current due to an increment in gate-source voltage when the MOSFET is saturated-- with *all other voltages held constant*.

  $v_{GS} = V_{GS} + v_{gs}$, $i_D = I_D + i_d$ -- we want to find $i_d = (?)\ v_{gs}$

We have the functional dependence of the total drain current in saturation:

$$i_D = \mu_n C_{ox} (W/2L) (v_{GS} - V_{Tn})^2 (1 + \lambda_n v_{DS}) = i_D(v_{GS}, v_{DS}, v_{BS})$$

Do a Taylor expansion around the DC operating point (also called the quiescent point or Q point) defined by the DC voltages $Q(V_{GS}, V_{DS}, V_{BS})$:

$$i_D = I_D + \left.\frac{\partial i_D}{\partial v_{GS}}\right|_Q (v_{gs}) + \frac{1}{2}\left.\frac{\partial^2 i_D}{\partial v_{GS}^2}\right|_Q (v_{gs})^2 + \ldots$$

If the small-signal voltage is really “small,” then we can neglect all everything past the linear term --

$$i_D = I_D + \left.\frac{\partial i_D}{\partial v_{GS}}\right|_Q (v_{gs}) = I_D + g_m v_{gs}$$

where the partial derivative is defined as the *transconductance*, g_m.

Transconductance

The small-signal drain current due to v_{gs} is therefore given by

$$i_d = g_m \, v_{gs}.$$

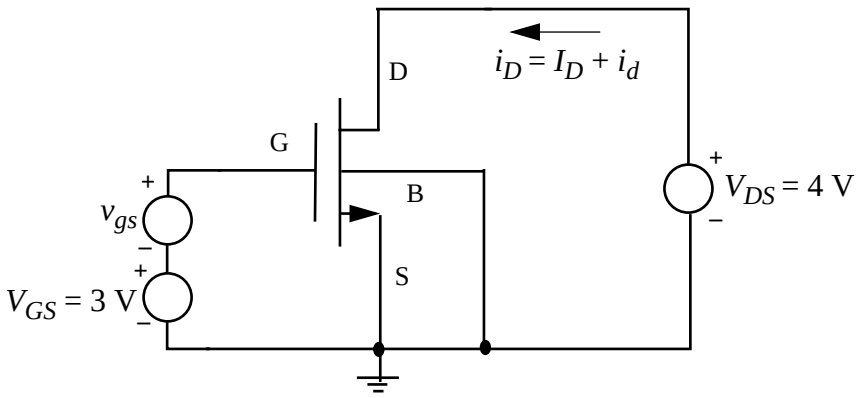

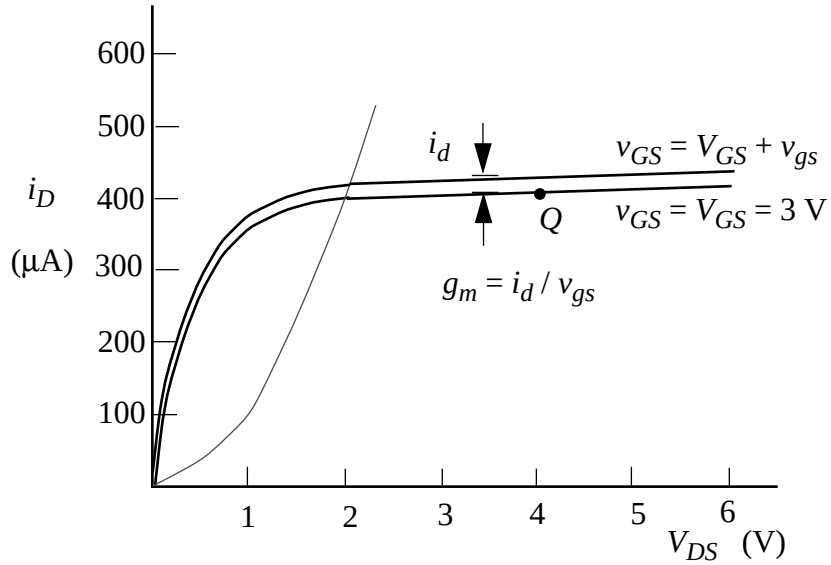

Another View of g_m

* Plot the drain current as a function of the gate-source voltage, so that the slope can be identified with the transconductance:

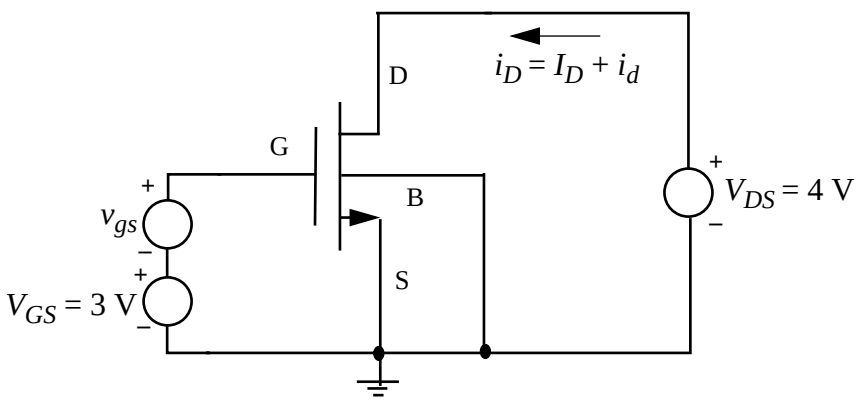

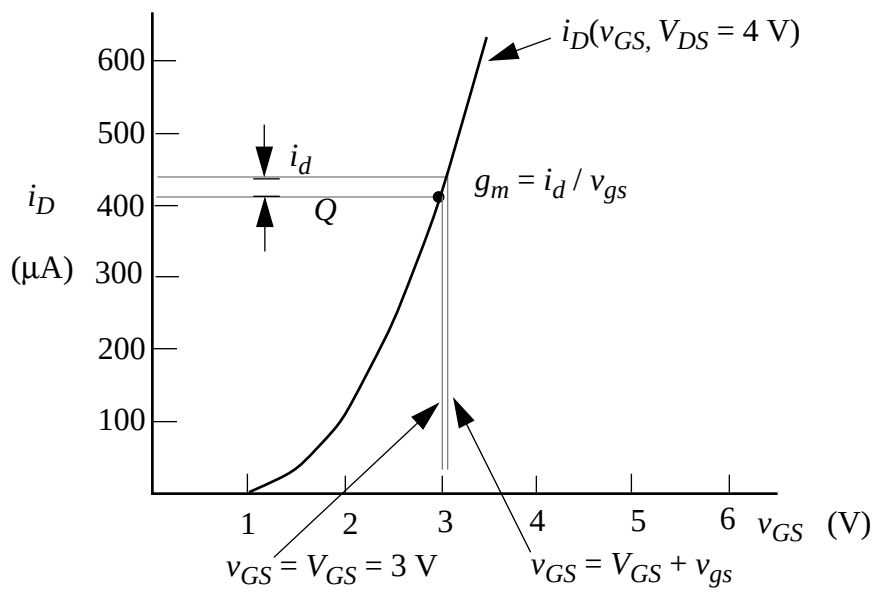

Transconductance (cont.)

- Evaluating the partial derivative:

$$g_m = \mu_n C_{ox}\left(\frac{W}{L}\right)(V_{GS} - V_{Tn})(1 + \lambda_n V_{DS})$$

Note that the transconductance is a function of the operating point, through its dependence on V_{GS} and V_{DS} -- and also the dependence of the threshold voltage on the backgate bias V_{BS}.

- In order to find a simple expression that highlights the dependence of g_m on the DC drain current, we neglect the (usually) small error in writing:

$$g_m = \sqrt{2\mu_n C_{ox}\left(\frac{W}{L}\right)I_D} = \frac{2I_D}{V_{GS} - V_{Tn}}$$

For typical values $(W/L) = 10$, $I_D = 100\ \mu A$, and $\mu_n C_{ox} = 50\ \mu AV^{-2}$ we find that

$g_m = 320\ \mu AV^{-1} = 0.32$ mS

- How do we make a circuit which expresses $i_d = g_m\, v_{gs}$? Since the current is not across the controlling voltage, we need a voltage-controlled current source:

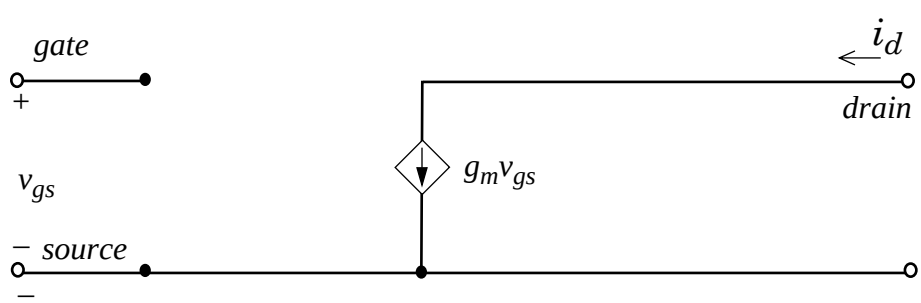

Output Conductance

- We can also find the change in drain current due to an increment in the drain-source voltage:

$$g_o = \left.\frac{\partial i_D}{\partial v_{DS}}\right|_Q = \mu_n C_{ox}\left(\frac{W}{2L}\right)(V_{GS} - V_T)^2 \lambda_n \cong \lambda_n I_D$$

The output resistance is the inverse of the output conductance

$$r_o = \frac{1}{g_o} = \frac{1}{\lambda_n I_D}$$

The small-signal circuit model with r_o added looks like:

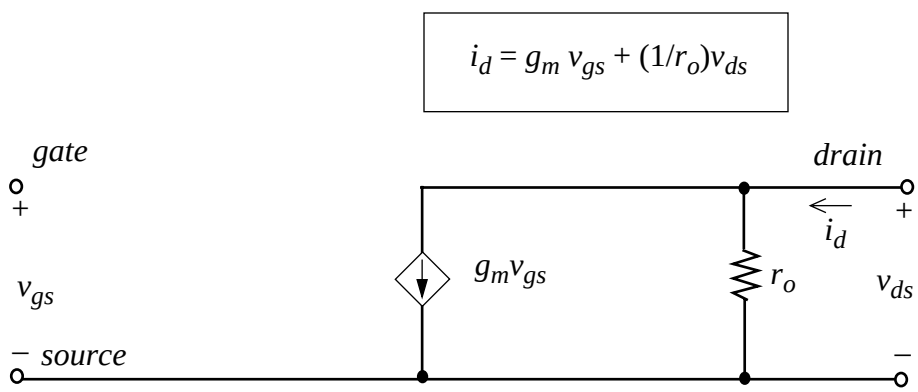

Backgate Transconductance

- We can find the small-signal drain current due to a change in the backgate bias by the same technique. The chain rule comes in handy to make use of our previous result for g_m:

$$g_{mb} = \left.\frac{\partial i_D}{\partial v_{BS}}\right|_Q = \left.\frac{\partial i_D}{\partial V_T}\right|_Q \left.\frac{\partial V_T}{\partial v_{BS}}\right|_Q$$

$$g_{mb} = (-g_m)\left.\frac{\partial V_T}{\partial v_{BS}}\right|_Q = (-g_m)\left(\frac{-\gamma_n}{2\sqrt{-2\phi_p - V_{BS}}}\right) = \frac{\gamma_n g_m}{2\sqrt{-2\phi_p - V_{BS}}} \quad .$$

The ratio of the "front-gate" transconductance g_m to the backgate transconductance g_{mb} is:

$$\frac{g_{mb}}{g_m} = \frac{\sqrt{2q\varepsilon_s N_a}}{2C_{ox}\sqrt{-2\phi_p - V_{BS}}} = \frac{1}{C_{ox}}\sqrt{\frac{q\varepsilon_s N_a}{2(-2\phi_p - V_{BS})}} = \frac{C_b(y{=}0)}{C_{ox}}$$

where $C_b(y{=}0)$ is the depletion capacitance at the source end of the channel --

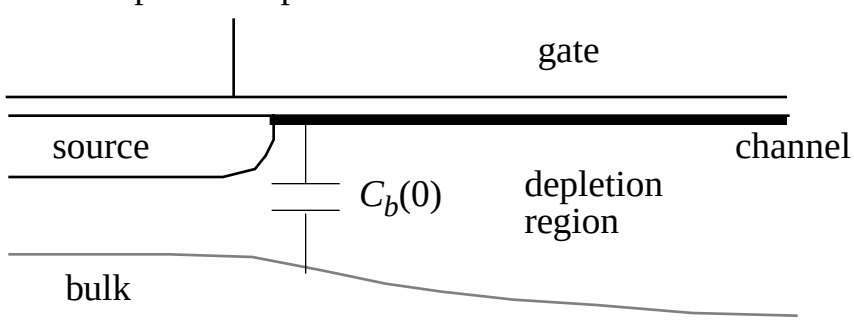

MOSFET Capacitances in Saturation

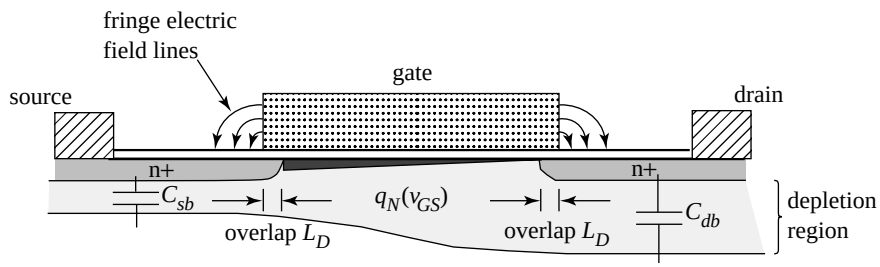

In saturation, the gate-source capacitance contains two terms, one due to the channel charge's dependence on v_{GS} [(2/3)WLC_{ox}] and one due to the overlap of gate and source (WC_{ov}, where C_{ov} is the *overlap capacitance* in fF per μm of gate width)

$$C_{gs} = \frac{2}{3}WLC_{ox} + WC_{ov}$$

In addition, there are depletion capacitances between the drain and bulk (C_{db}) and between source and bulk (C_{sb}). Finally, the extension of the gate over the field oxide leads to a small gate-bulk capacitance C_{gb}.

Complete Small-Signal Model

- The capacitances are “patched” onto the small-signal circuit schematic containing g_m, g_{mb}, and r_o

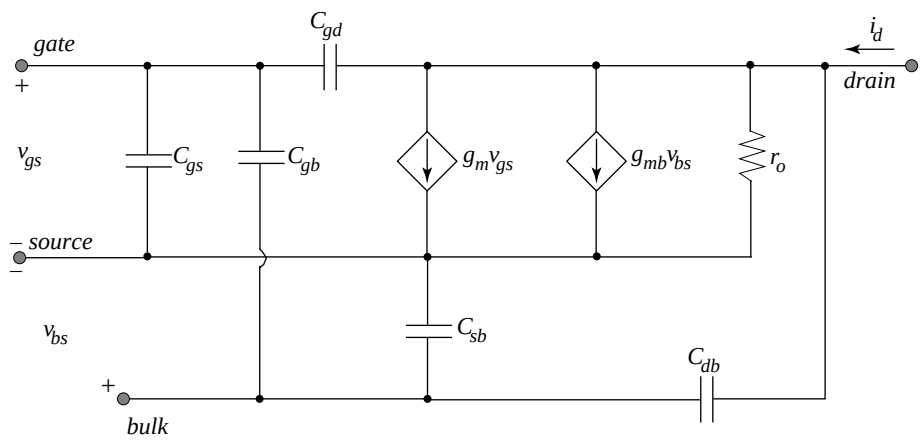

- p-channel MOSFET small-signal model

  the source is the highest potential and is located at the top of the schematic

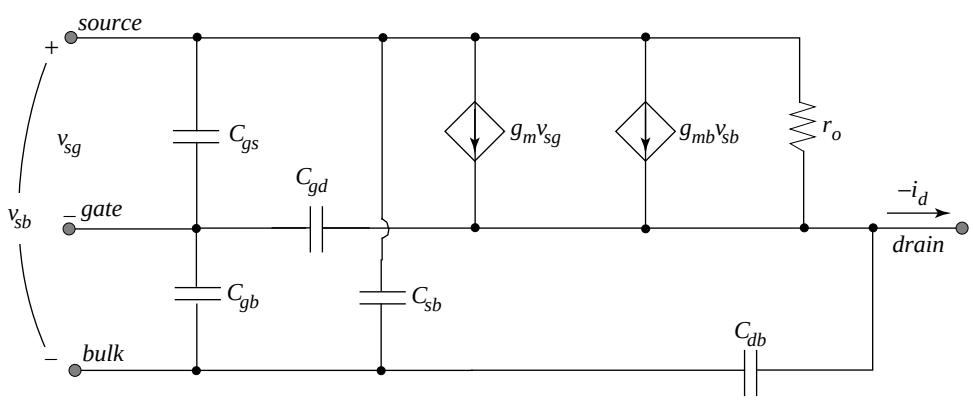

Circuit Simulation

- *Objectives*:
  - fabricating an IC costs $1000 ... $100,000 per run

    ---> nice to get it “right” the first time
  - check results from hand-analysis

    (e.g. validity of assumptions)
  - evaluate functionality, speed, accuracy, ... of large circuit blocks or entire chips
- *Simulators*:
  - **SPICE**: invented at UC Berkeley circa 1970-1975

    commercial versions: HSPICE, PSPICE, I-SPICE, ... (same core as Berkeley SPICE, but add functionality, improved user interface, ...)

    EE 105: student version of PSPICE on PC, limited to 10 transistors
  - other simulators for higher speed, special needs (e.g. SPLICE, RSIM)
- *Limitations*:
  - simulation results provide no insight (e.g. how to increase speed of circuit)
  - results sometimes wrong (errors in input, effect not modeled in SPICE)

  ===> always do hand-analysis first and COMPARE RESULTS

MOSFET Geometry in SPICE

- Statement for MOSFET ... *D,G,S,B* are node numbers for drain, gate, source, and bulk terminals

M*name D G S B MODname* **L= _ W=_ AD= _ AS=_ PD=_ PS=_**

MODname specifies the model name for the MOSFET

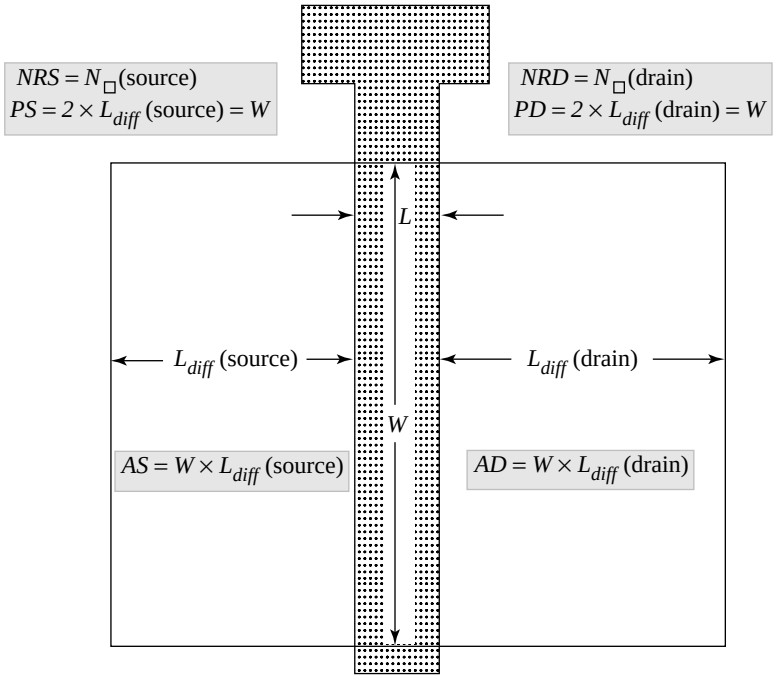

MOSFET Model Statement

.MODEL *MODname* **NMOS/PMOS VTO=_ KP=_ GAMMA=_ PHI=_ LAMBDA=_ RD=_ RS=_ RSH=_ CBD=_ CBS=_CJ=_ MJ=_ CJSW=_ MJSW=_ PB=_ IS= _ CGDO=_ CGSO=_ CGBO=_ TOX=_ LD=_**

Parameter name (SPICE / this text)	SPICE symbol Eqs. (4.93), (4.94)	Analytical symbol Eqs. (4.59), (4.60)	Units
channel length	L_{eff}	L	m
polysilicon gate length	L	L_{gate}	m
lateral diffusion/ gate-source overlap	LD	L_D	m
transconductance parameter	KP	$\mu_n C_{ox}$	A/V^2
threshold voltage / zero-bias threshold	VTO	V_{TnO}	V
channel-length modulation parameter	$LAMBDA$	λ_n	V^{-1}
bulk threshold / backgate effect parameter	$GAMMA$	γ_n	$V^{1/2}$
surface potential / depletion drop in inversion	PHI	$-\phi_p$	V

DC Drain Current Equations:

$$I_{DS} = 0 \qquad (V_{GS} \le -V_{TH})$$

$$I_{DS} = \frac{KP}{2}(W/L_{eff})V_{DS}[2(V_{GS} - V_{TH}) - V_{DS}](1 + LAMBDA \cdot V_{DS}) \qquad (0 \le V_{DS} \le V_{GS} - V_{TH})$$

$$I_{DS} = \frac{KP}{2}(W/L_{eff})(V_{GS} - V_{TH})^2(1 + LAMBDA \cdot V_{DS}) \qquad (0 \le V_{GS} - V_{TH} \le V_{DS})$$

$$V_{TH} = V_{TO} + GAMMA(\sqrt{2 \cdot PHI - V_{BS}} - \sqrt{2 \cdot PHI})$$

Capacitances

SPICE includes the “sidewall” capacitance due to the perimeter of the source and drain junctions --

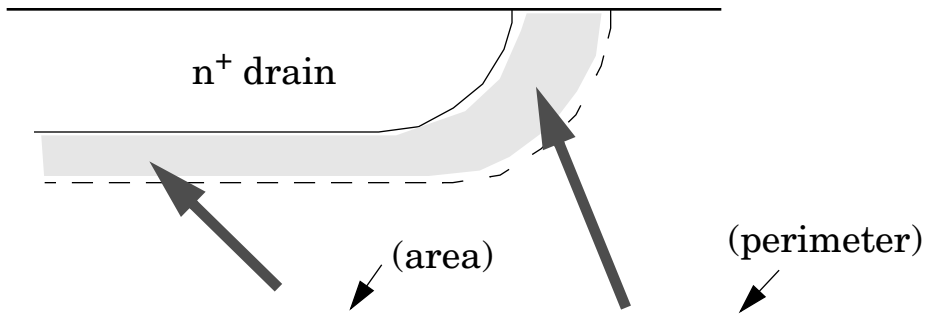

$$C_{BD}(V_{BD}) = \frac{CJ \cdot AD}{(1 - V_{BD}/PB)^{MJ}} + \frac{CJSW \cdot PD}{(1 - V_{BD}/PB)^{MJSW}}$$

Gate-source and gate-bulk overlap capacitance are specified by *CGDO* and *CGSO* (units: F/m).

Level 1 MOSFET model:

```
.MODEL MODN NMOS LEVEL=1 VTO=1 KP=50U LAMBDA=.033 GAMMA=.6
+ PHI=0.8 TOX=1.5E-10 CGDO=5E-10 CGSO= 5e-10 CJ=1E-4 CJSW=5E-10
+ MJ=0.5 PB=0.95
```

The Level 1 model is adequate for channel lengths longer than about 1.5 μm

For sub-μm MOSFETs, BSIM = “Berkeley Short-Channel IGFET Model” is the industry-standard SPICE model.