MOS Field Effect Transistors

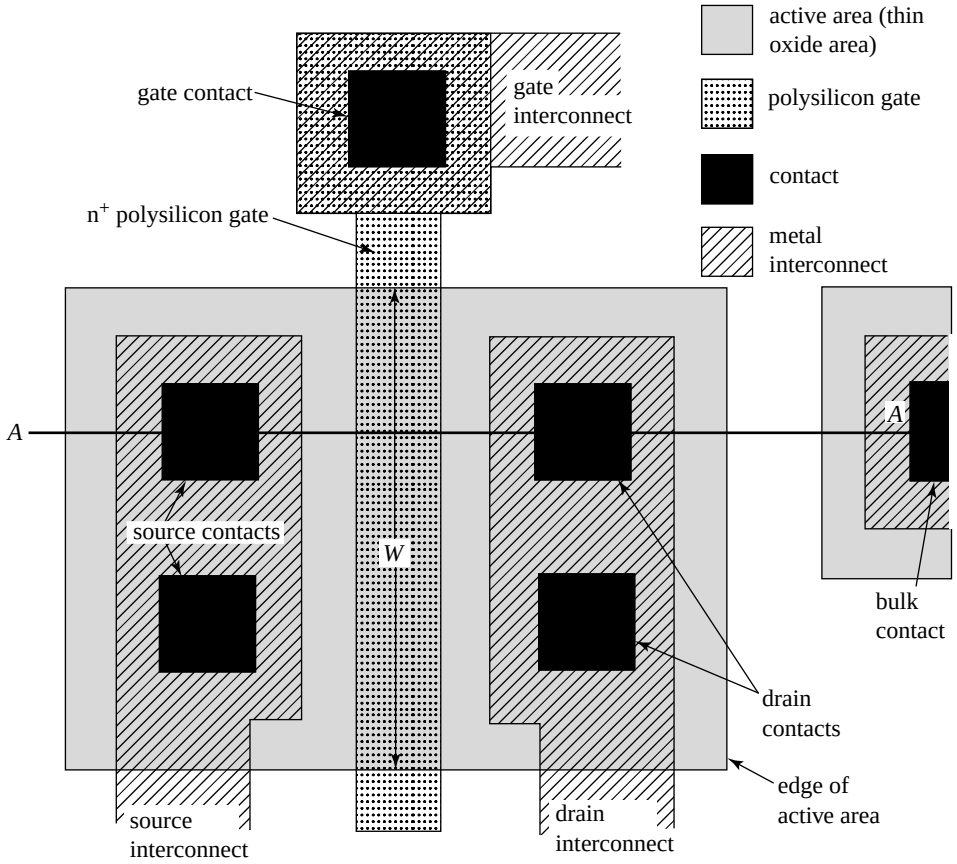

(a)

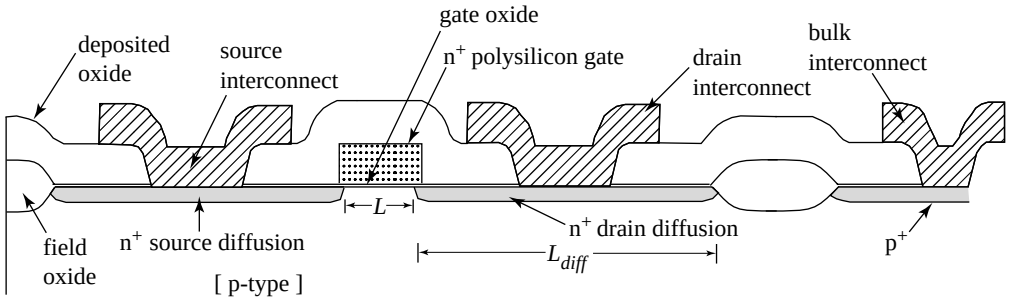

(b)

MOSFET Circuit Symbols

Two complementary devices (each with two symbols): both are very useful

p-substrate (n-type channel under gate oxide)

n-substrate (p-type channel under gate oxide)

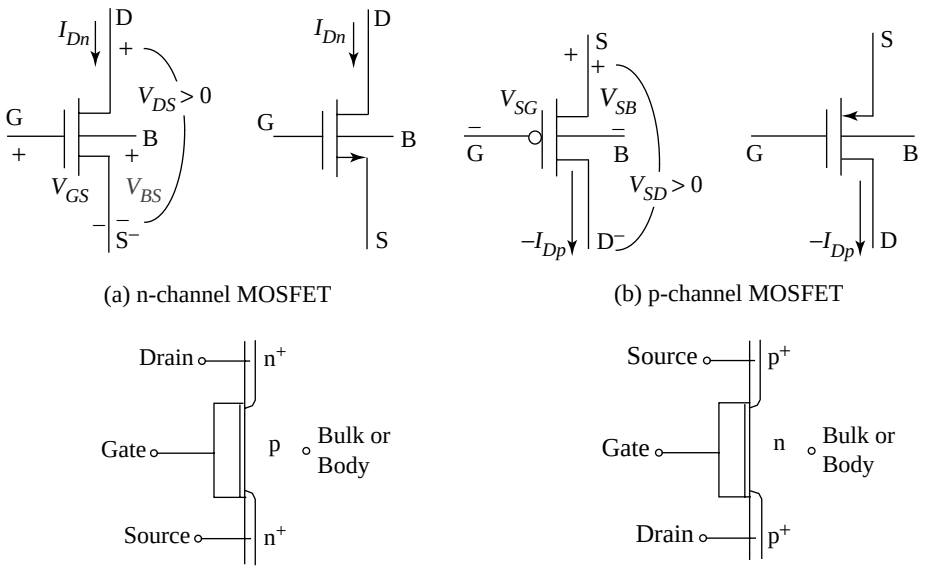

Four electrical terminals: source (lowest potential for n-channel, highest for p-channel), drain, gate, and bulk.

Basic concept: inversion layer (called the channel) formed under gate between source and drain enables drift current

n-Channel MOSFET Drain Characteristics

Set-up: $I_G = 0$, $V_{DB} = V_{DS} > 0$ to reverse-bias pn junctions to bulk.

- Measurement scheme: short bulk to source to make it a three terminal device, vary gate voltage, drain voltage and see effect on drain current.

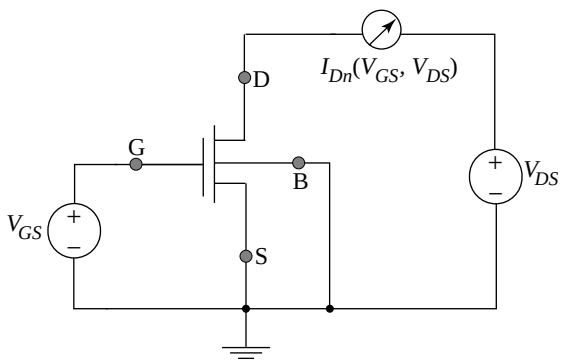

(a)

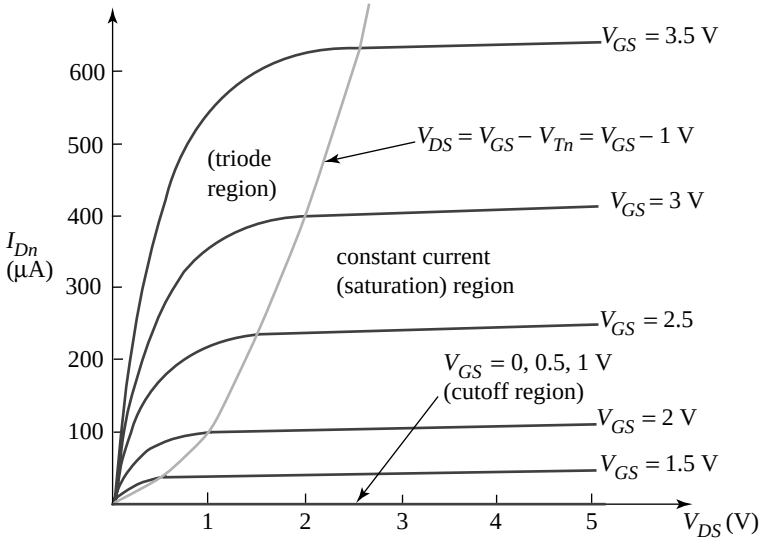

(b)

p-Channel MOSFET Drain Characteristics

Set-up: $I_G = 0$, $V_{BD} = V_{SD} > 0$ to reverse-bias pn junctions to bulk.

- Measurement scheme: short bulk to source to make it a three terminal device, vary gate voltage, drain voltage and see effect on drain current $-I_D$

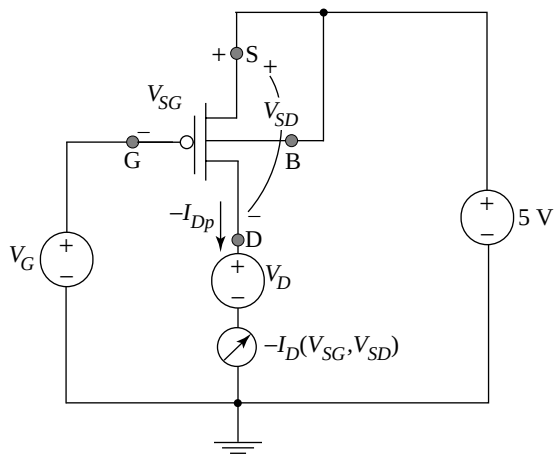

(a)

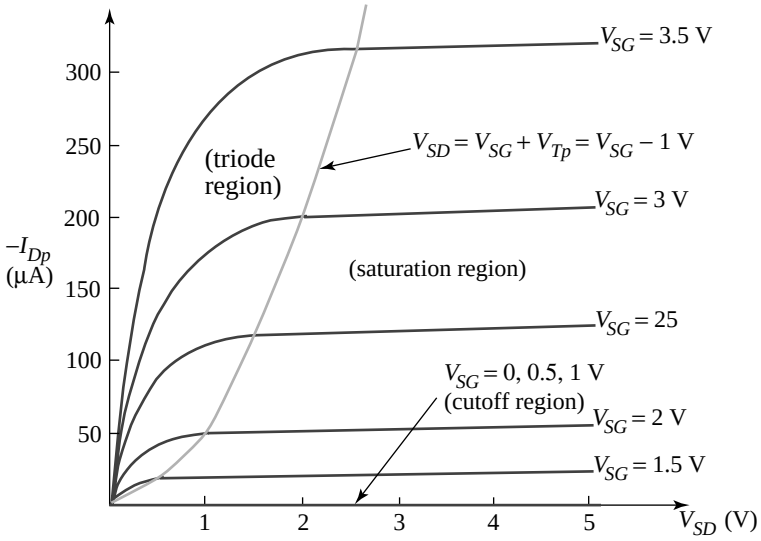

(b)

Quantitative MOSFET

- **Step 1**. Connect the MOS capacitor results for the electron charge in the inversion layer Q_N to the drain current.

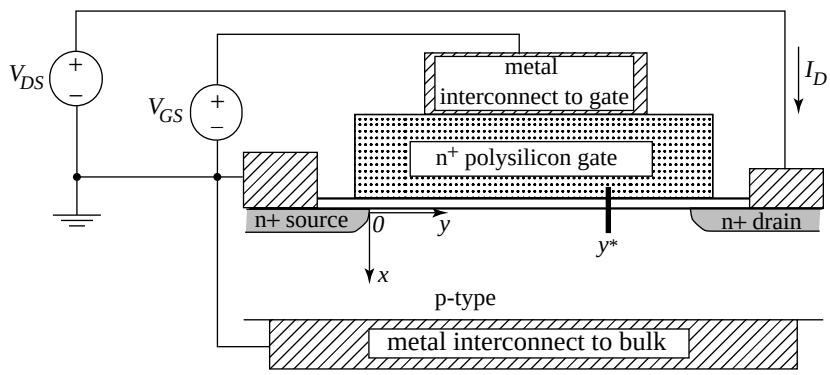

(a)

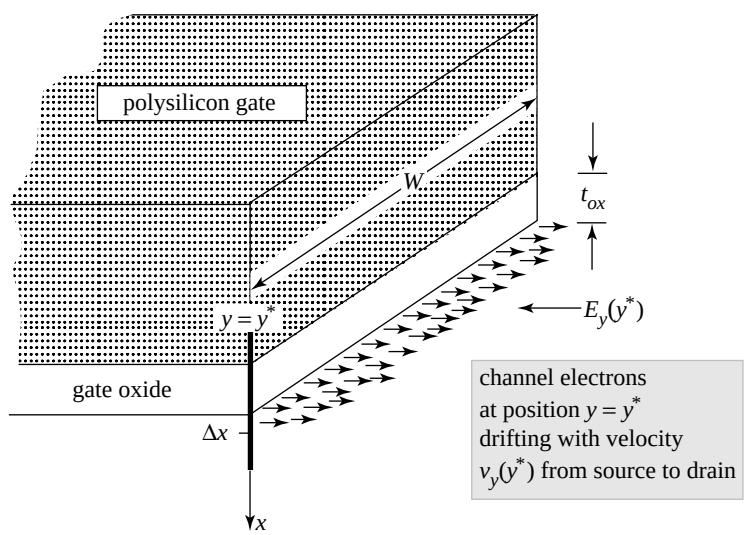

(b)

Drift Current Equation

- Drift current for electrons in the channel:

$$J_y(x, y) = -qn(x, y)v_y(y)$$

The drain current at position y is the integral of the drift current density across the cross section. Since the conventional direction of I_D is *opposite* to the direction of the y axis, we insert a minus sign:

$$I_D = -W\int_0^{\Delta x} J_y(x, y)dx = Wv_y(y)\left(\int_0^{\Delta x} qn(x, y)dx\right)$$

- The integral is the negative of the electron charge in the channel, per unit area, at point y. The symbol for this quantity is - $Q_N(y)$:

$$\boxed{I_D = -Wv_y(y)Q_N(y)}$$

Note that I_D isn't a function of the position in the channel

MOSFET DC Model: a First Pass

- Start simple -- small V_{DS} makes the channel uniform

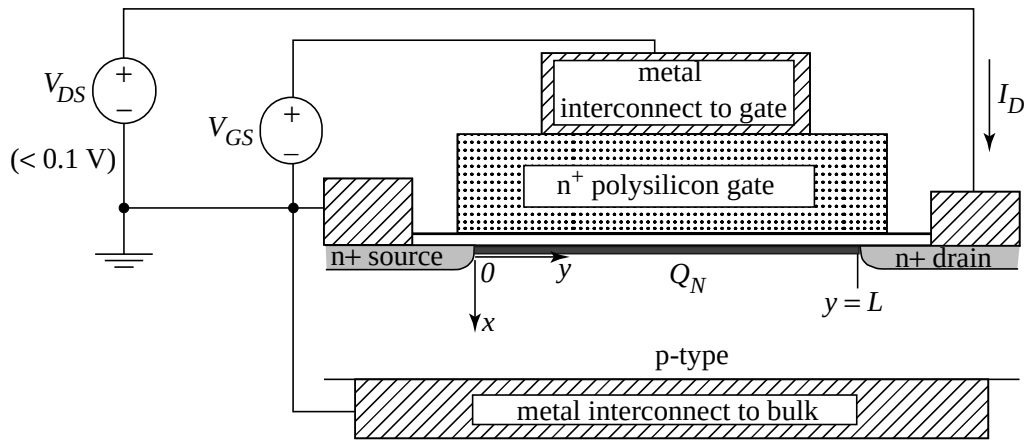

- Channel charge: MOS capacitor in inversion, with $V_{GB} = V_{GS}$.

$$Q_N = -C_{ox}(V_{GB} - V_{Tn}) = -C_{ox}(V_{GS} - V_{Tn})$$

- Drift velocity: electric field is just $E_y = - V_{DS} / L$ so $v_y = - \mu_n (-V_{DS} / L)$

- Drain current equation for V_{DS} "small" ... say, less than 0.1 V.

$$I_D = \mu_n C_{ox}\left(\frac{W}{L}\right)(V_{GS} - V_{Tn})V_{DS}$$

Note that I_D is proportional to V_{DS} with channel resistance under gate control. This voltage controlled resistor region is sometimes useful.

Triode Region

- Increase V_{DS} -- channel charge becomes a function of position y.

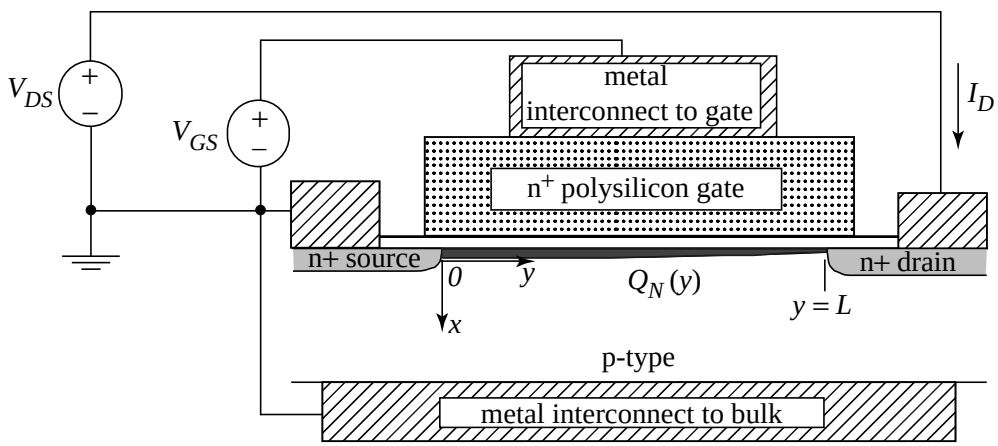

- First pass: approximate the drain current equation by taking averages of the channel charge and the drift velocity (Second pass: Section 4.4 (not assigned))

$$I_D \approx -W\overline{Q_N}\,\overline{v_y}$$

- Average drift velocity: still use $\mu_n (V_{DS} / L)$ -- which is a very rough approximation.

Triode Region (Cont.)

- Next, approximate the average channel charge by averaging $Q_N(y=0)$ at the source end and $Q_N(y=L)$ at the drain end of the channel:

$$Q_N(y=0) = -C_{ox}(V_{GS} - V_{Tn})$$

At the drain end, the positive drain voltage *reduces* the magnitude of the channel charge ... why? The effect can be approximated by using V_{GD} (the drop from drain to channel, at $y = L$) --

$$Q_N(y=L) = -C_{ox}(V_{GD} - V_{Tn}) = -C_{ox}(V_{GS} - V_{DS} - V_{Tn})$$

Note that $V_{GD} = V_{GS} - V_{DS} > V_{Tn}$ in order for there to be a channel left at the drain end.

- Substituting, we derive the equation for the triode region, which is defined by $V_{GS} - V_{DS} > V_{Tn}$ and $V_{GS} > V_{Tn}$.

$$\boxed{I_D = \mu_n C_{ox}\left(\frac{W}{L}\right)(V_{GS} - V_{Tn} - V_{DS}/2)V_{DS}}$$

Drain Characteristics

- Example: $\mu_n C_{ox}$ (W/L) = 50 μA/V^2, V_{Tn} = 1 V, and (W/L) = 4.

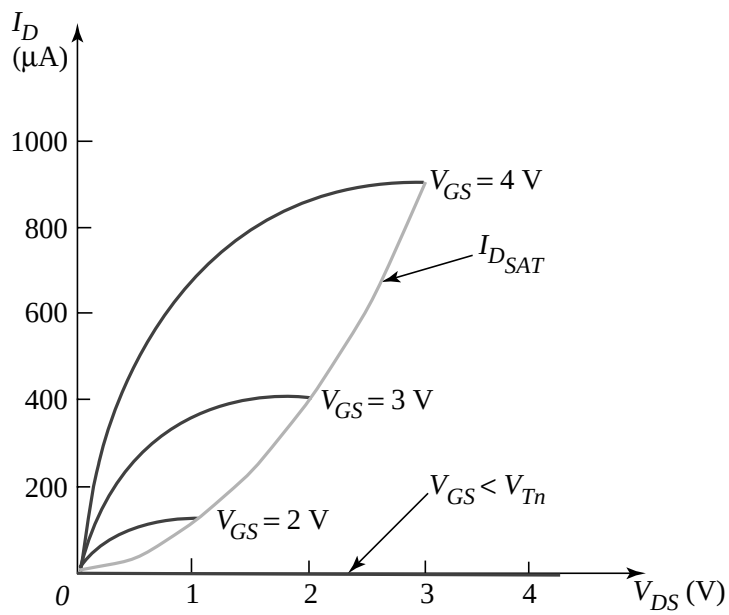

- What happens when $V_{DS} > V_{GS} - V_{Tn} = V_{DS(sat)}$? $|Q_N(y = L)| = 0$!

  Initial thought is that the lack of a channel at the drain end means that I_D must drop to zero ... WRONG!

  Drain terminal loses control over channel --> drain current “saturates” and remains constant (to first approximation) at the value given by $V_{DS} = V_{DS(sat)}$.

Saturation Region

- When $V_{GS} > V_{Tn}$ and $V_{DS} > V_{DS(sat)} = V_{GS} - V_{Tn}$, the drain current is:

$$I_D = I_{D(sat)} = \mu_n C_{ox}\left(\frac{W}{2L}\right)(V_{GS} - V_{Tn})^2$$

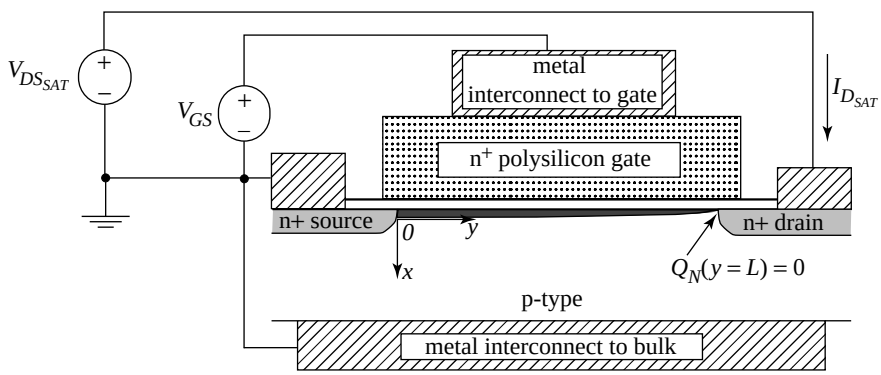

- Full model:

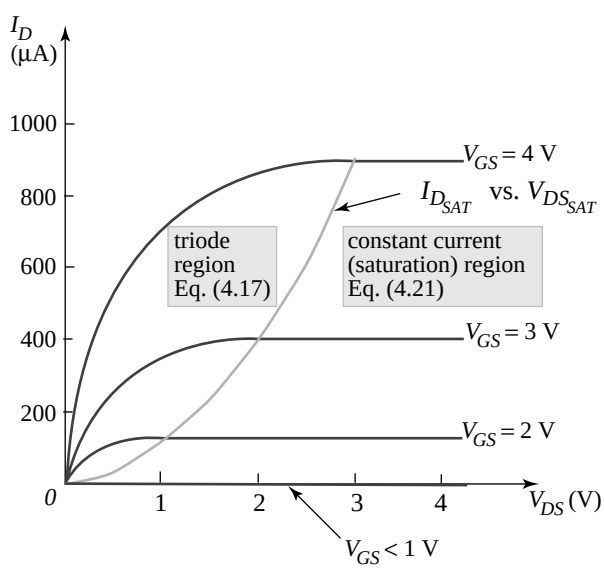

MOSFET Circuit Models

- n-channel MOSFET drain current in cutoff, triode, and saturation:

$$I_D = 0 \text{ A} \qquad (V_{GS} \le V_{Tn})$$

$$I_D = \mu_n C_{ox}(W/L)[V_{GS} - V_{Tn} - (V_{DS}/2)](1 + \lambda_n V_{DS})V_{DS} \qquad (V_{GS} \ge V_{Tn}, V_{DS} \le V_{GS} - V_{Tn})$$

$$I_D = \mu_n C_{ox}(W/(2L))(V_{GS} - V_{Tn})^2(1 + \lambda_n V_{DS}) \qquad (V_{GS} \ge V_{Tn}, V_{DS} \ge V_{GS} - V_{Tn})$$

<u>Numerical values</u>:

μ_n is a function of V_{GS} along the channel and is much less than the mobility in the bulk (typical value 215 $cm^2/(Vs)$) -- therefore, we consider that $\mu_n C_{ox}$ is a measured parameter. Typical value: $\mu_n C_{ox} = 50\ \mu AV^{-2}$

λ_n, sometimes called the channel length modulation parameter, increases as the channel length L is reduced:

$$\lambda_n \approx \frac{0.1\mu\text{mV}^{-1}}{L}$$

The triode region I_D equation has $(1 + \lambda_n V_{DS})$ added in order to avoid a jump at the boundary with the saturation region. For hand calculation of DC voltages and currents, this term is usually omitted from I_D.

V_{Tn} = threshold voltage = 0.7 - 1.0 V typically for an n-channel MOSFET.

Backgate Effect

- The threshold voltage is a function of the bulk-to-source voltage V_{BS} through the *backgate effect*.

$$V_{Tn} = V_{TOn} + \gamma_n(\sqrt{-V_{BS}-2\phi_p} - \sqrt{-2\phi_p})$$

where V_{TO} is the threshold voltage with $V_{BS} = 0$ and γ is the backgate effect parameter

$$\gamma_n = (\sqrt{2q\varepsilon_s N_a})/C_{ox}$$

- Physical origin: V_{BS} (a negative voltage to avoid forward biasing the bulk-to-source pn junction) increases the depletion width, which increases the bulk charge and thus, the threshold voltage.

$I_D = I_D(V_{GS}, V_{DS}, V_{BS})$ since $V_{Tn} = V_{Tn}(V_{BS})$

Common situation is that $V_{BS} = 0$ by electrically shorting the source to the bulk (either the substrate or a deep diffused region called a *well*)

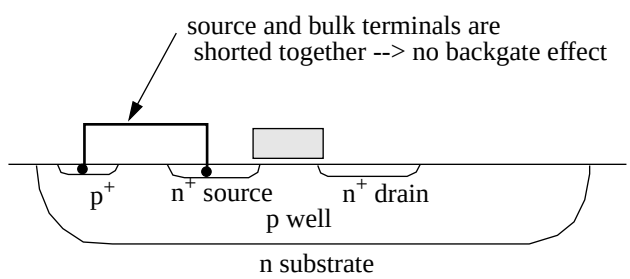

For this case, $V_{Tn} = V_{TOn}$.

p-channel MOSFETs
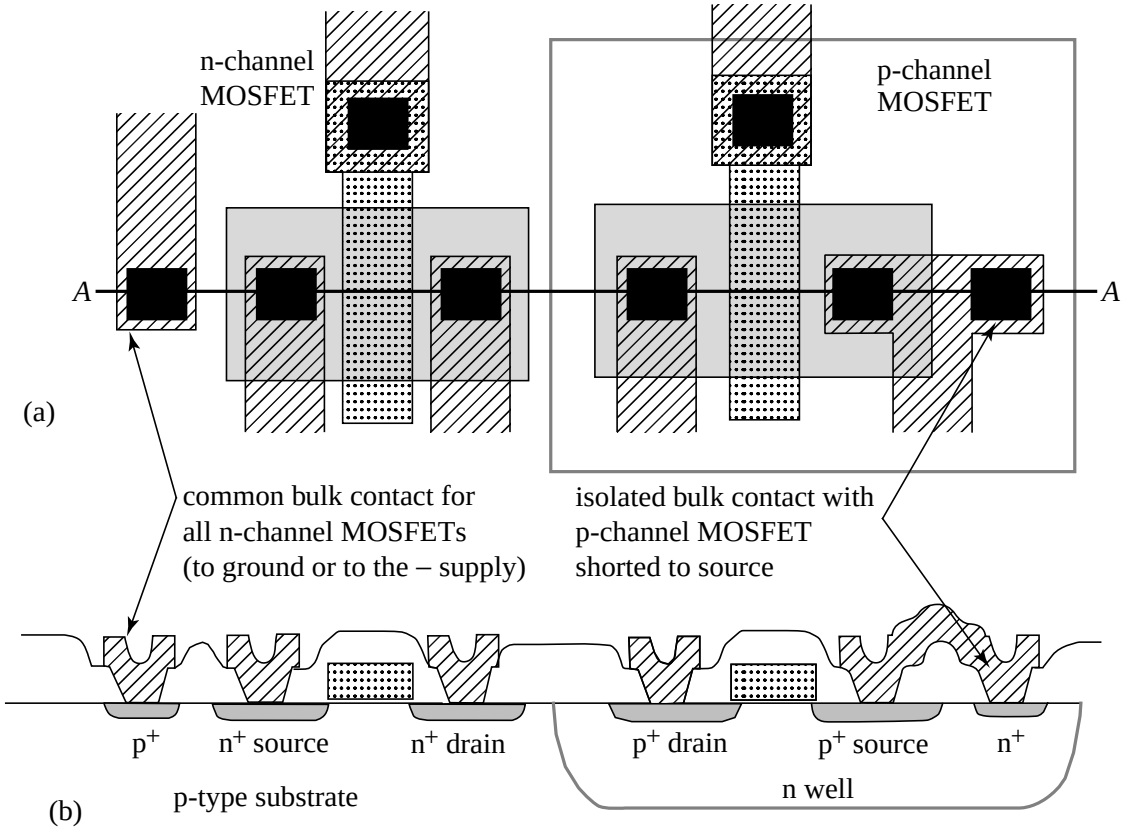
- Structure is *complementary* to the n-channel MOSFET
- In a CMOS technology, one or the other type of MOSFET is built into a *well* -- a deep diffused region -- so that there are electrically isolated "bulk" regions in the same substrate