University of California at Berkeley

EE 105:

Microelectronic Devices and Circuits

Spring 1997

Roger T. Howe

A Motivating Example

- An analog-to-digital converter for data transmission -- the analog voltage is converted into a 13 bit digital word at 5 Msamples /sec.

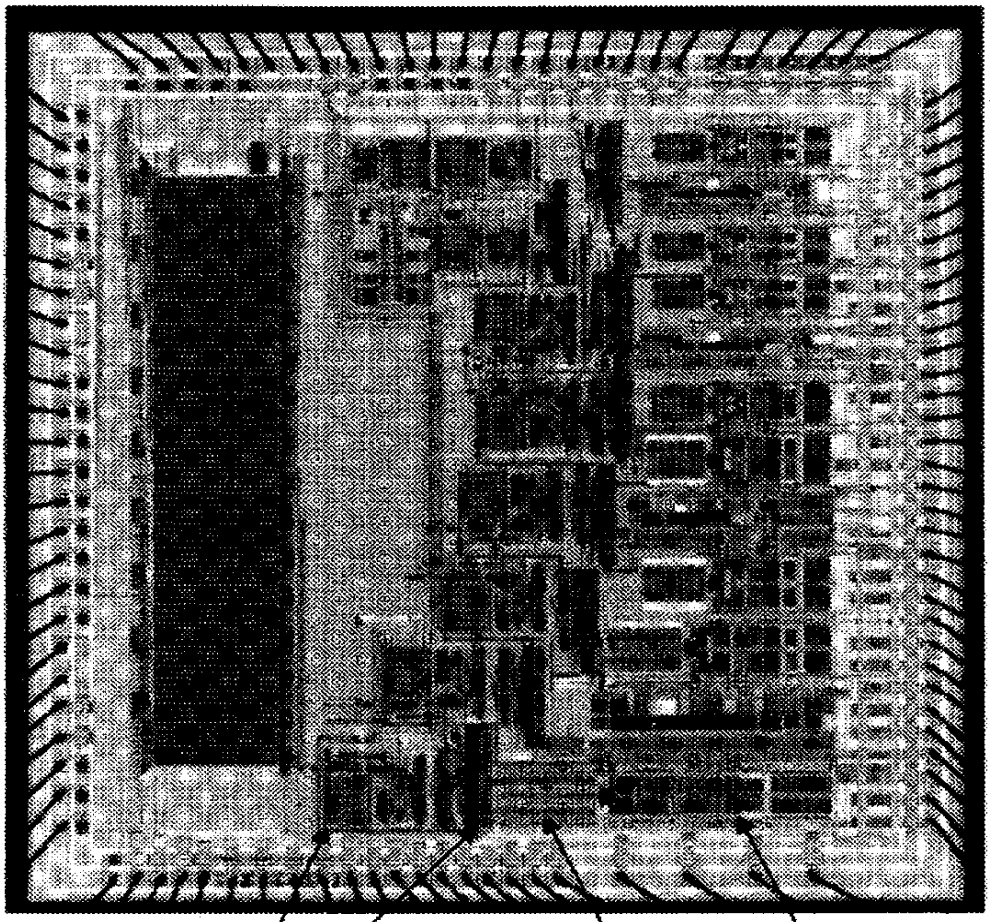

Fig. 7. Die photograph of the prototype ADC.

ref. D. W. Cline and P. R. Gray, *IEEE J. Solid-State Circuits*, **31**, March 1996, pp. 294-303. © 1996 IEEE. Used by permission.

Understanding this Microsystem on a Chip --

Technology and Devices: 1.2 μm n-well CMOS process

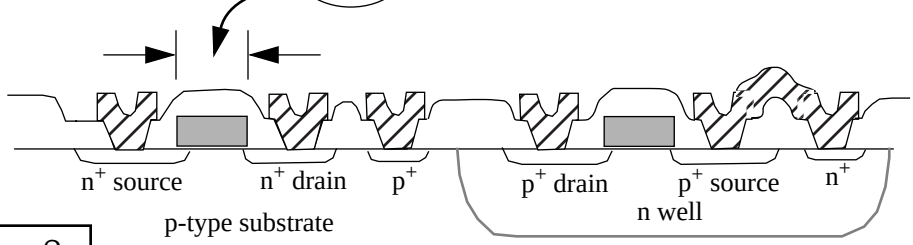

Lecture 8

Digital Integrated Circuits: switches, shift register for collecting samples

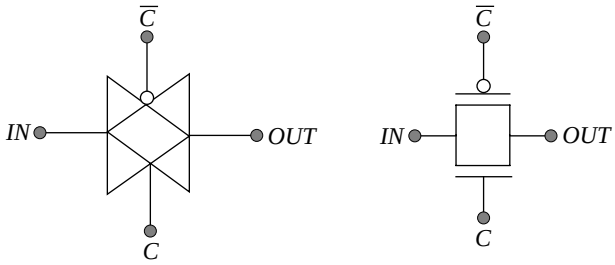

Lecture 14

Analog Integrated Circuits: 12 opertional amplifiers used in signal processing

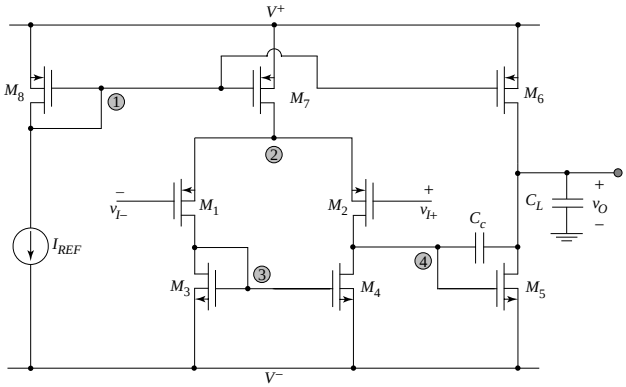

Lecture 28

Silicon Crystal Structure

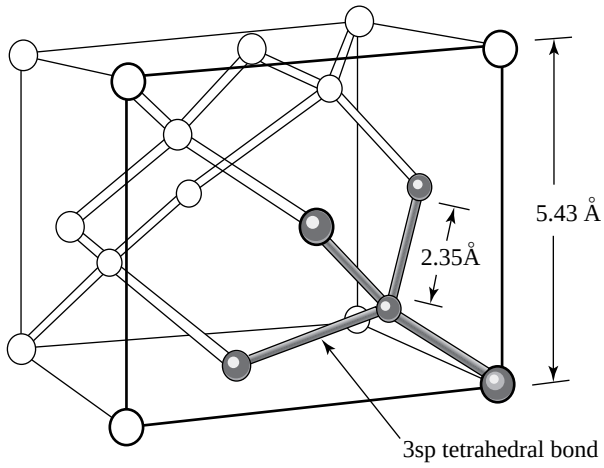

- diamond lattice
- atoms are bonded tetrahedrally with covalent bonds

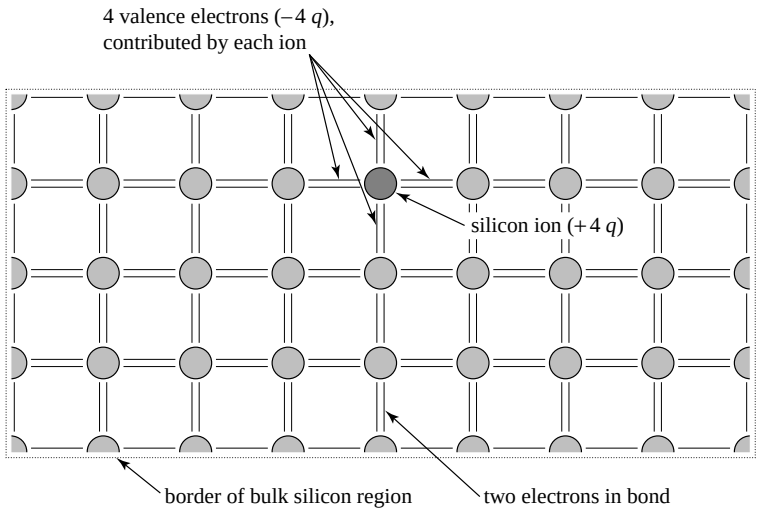

- Two-dimensional crystal for sketching

Intrinsic (Pure) Silicon ($T > 0$)

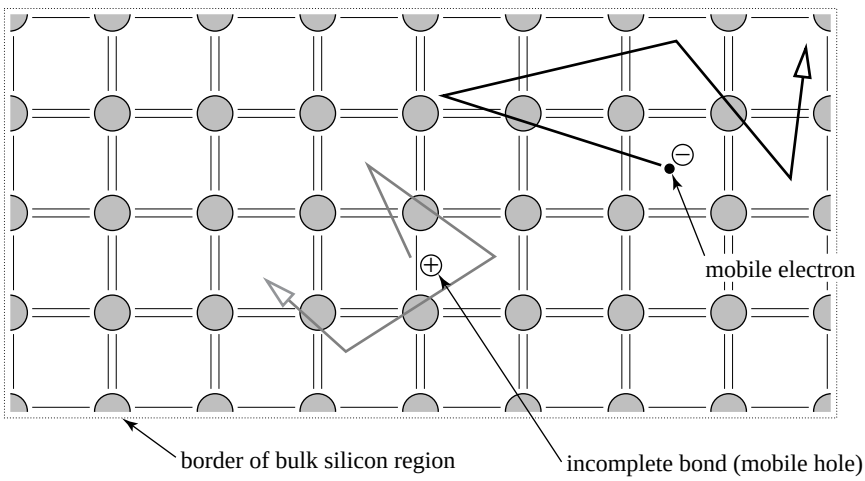

- electron: mobile negative unit charge, concentration n (cm^{-3})
- hole: mobile positive unit charge, concentration p (cm^{-3})

Unit of charge: $q = 1.6 \times 10^{-19}$ Couloumbs [C]

Thermal Equilibrium

Generation rate: G units: $cm^{-3}\ s^{-1}$ (thermal, optical processes)

Recombination rate: $R \propto n \cdot p$

n = electron concentration cm^{-3}

p = hole concentration cm^{-3}

With the absense of external stimulus, $G_o = R_o$

subscript "o" indicates thermal equilibrium

$n_o\, p_o$ = constant = $n_i^2 = 10^{20}\ cm^{-3}$ at room temperature (approximately)

Since holes and electrons are created *together* in intrinsic silicon,

$n_o = p_o$ which implies that both are equal to $n_i = 10^{10}\ cm^{-3}$

Doping

Donors (group V) *donate* their 5th valence electron and become fixed positive charges in the lattice. Examples: Arsenic, Phosphorus.

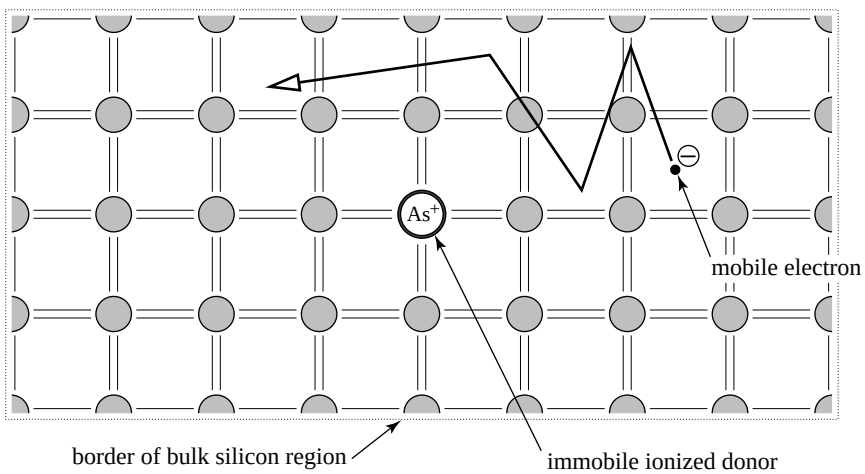

How are the thermal equilibrium electron and hole concentrations changed by doping?

> region is "bulk silicon" -- in the interior of the crystal, away from surfaces

> charge in region is *zero*, before and after doping:

$$\rho = \text{charge density } (C/cm^3) = 0 = \underbrace{(-qn_o)}_{\text{electrons}} + \underbrace{(qp_o)}_{\text{holes}} + \underbrace{(qN_d)}_{\text{donors}}$$

where the donor concentration is N_d (cm^{-3})

Electron Concentration in Donor-Doped Silicon

Since we are in thermal equilibrium, $n_o\, p_o = n_i^2$ (not changed by doping):

Substitute $p_o = n_i^2 / n_o$ into charge neutrality equation and find that:

$$0 = -qn_o + \frac{qn_i^2}{n_o} + qN_d$$

Quadratic formula -->

$$n_o = \frac{N_d + \sqrt{N_d^2 + 4n_i^2}}{2} = \frac{N_d}{2} + \frac{N_d}{2}\sqrt{1 + \frac{4n_i^2}{N_d^2}}$$

We *always* dope the crystal so that $N_d >> n_i$ ... ($N_d = 10^{13}$ - 10^{19} cm^{-3}), so the square root reduces to 1:

$$\boxed{n_o = N_d}$$

The equilibrium hole concentration is:

$$\boxed{p_o = n_i^2 / N_d}$$

“one electron per donor” is a way to remember the electron concentration in silicon doped with donors.

Numerical Example

Donor concentration: $N_d = 10^{15}$ cm^{-3}

Thermal equilibrium electron concentration:

$$n_o \approx N_d = 10^{15} \text{ cm}^{-3}$$

Thermal equilibrium hole concentration:

$$p_o = n_i^2 / n_o \approx n_i^2 / N_d = (10^{10} \text{ cm}^{-3})^2 / 10^{15} \text{ cm}^{-3} = 10^5 \text{ cm}^{-3}$$

Silicon doped with donors is called **n-type** and electrons are the **majority carriers**. Holes are the (nearly negligible) **minority carriers**.

Doping with Acceptors

Acceptors (group III) *accept* an electron from the lattice to fill the incomplete fourth covalent bond and thereby create a mobile hole and become fixed negative charges. Example: Boron.

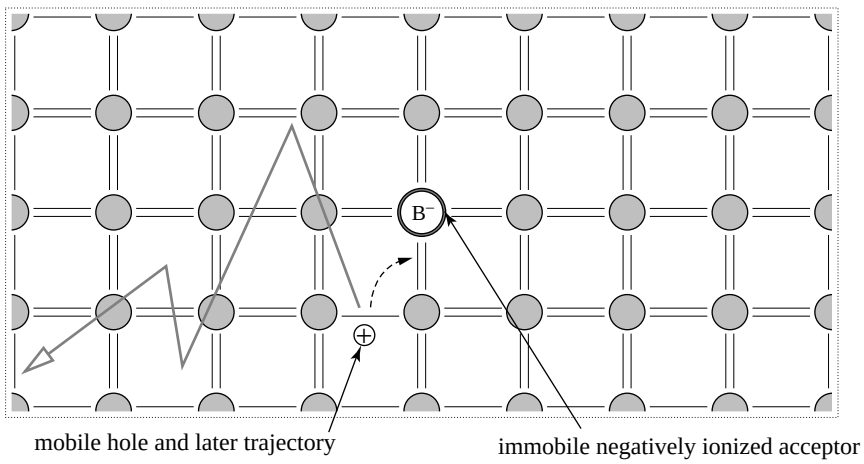

Acceptor concentration is N_a (cm^{-3}), we have $N_a >> n_i$ typically and so:

one hole is added per acceptor:

$$\boxed{p_o = N_a}$$

equilibrium electron concentration is::

$$\boxed{n_o = n_i^2 / N_a}$$

Doping with both Donors and Acceptors: Compensation

- Typical situation is that *both* donors and acceptors are present in the silicon lattice ... mass action law means that $n_o \neq N_d$ and $p_o \neq N_a$!

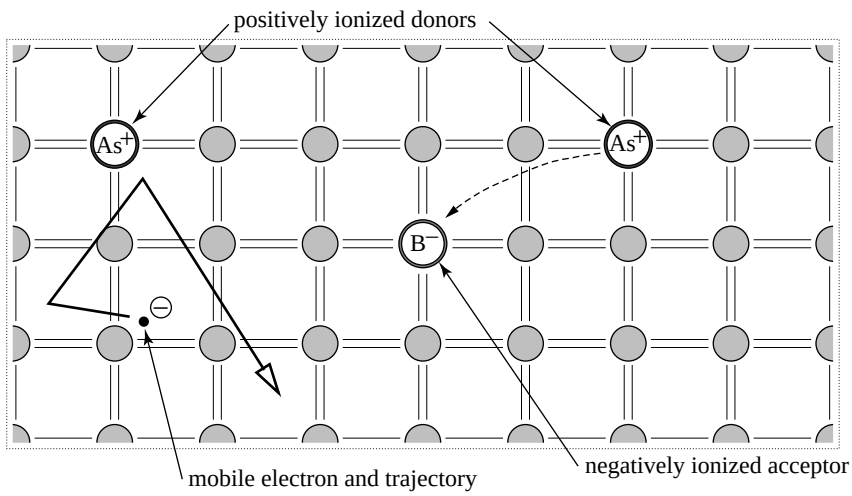

- Applying charge neutrality with four types of charged species:

$$\rho = -qn_o + qp_o + qN_d - qN_a = q(p_o - n_o + N_d - N_a) = 0$$

we can substitute from the mass-action law $n_o p_o = n_i^2$ for either the electron concentration or for the hole concentration: which one is the majority carrier?

answer (not surprising): $N_d > N_a$ --> electrons

$N_a > N_d$ --> holes

Compensation

Example shows $N_d > N_a$

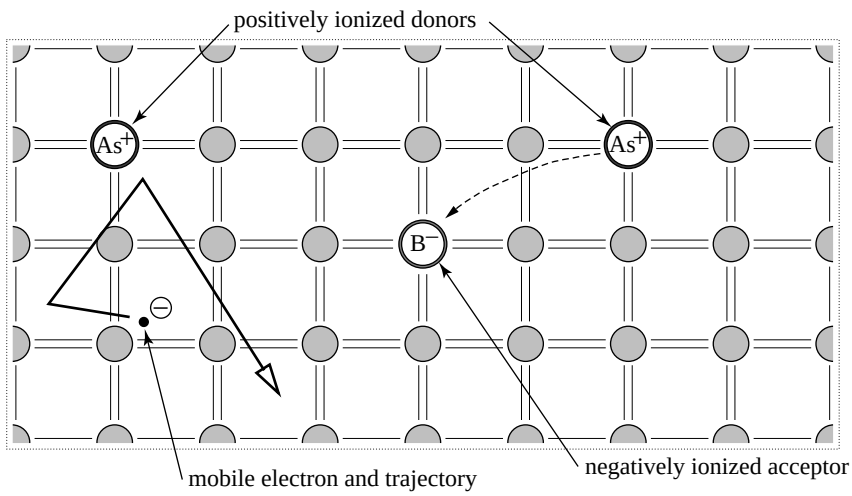

- Applying charge neutrality with four types of charged species:

$$\rho = -qn_o + qp_o + qN_d - qN_a = q(p_o - n_o + N_d - N_a) = 0$$

we can substitute from the mass-action law $n_o p_o = n_i^2$ for either the electron concentration or for the hole concentration: which one is the majority carrier?

answer (not surprising): $N_d > N_a$ --> electrons

$N_a > N_d$ --> holes

Carrier Concentrations in Compensated Silicon

- For the case where $N_d > N_a$, the electron and hole concentrations are:

$$n_o \cong N_d - N_a \quad \text{and} \quad p_o \cong \frac{n_i^2}{N_d - N_a}$$

- For the case where $N_a > N_d$, the hole and electron concentrations are:

$$p_o \cong N_a - N_d \quad \text{and} \quad n_o \cong \frac{n_i^2}{N_a - N_d}$$

Note that these approximations assume that $|N_d - N_a| >> n_i$, which is nearly always true.